WESTWARD PARTS

SPRAYER PARTS CATALOGUE

Nozzles and Nozzle Accessories ▪ Valves and Manifolds ▪ Gauges and Calibration ▪ Fittings & Cam Locks ▪ Hose ▪ Pumps ▪ Spray Guns and Accessories ▪ Tanks and Tank Components ▪ Monitors, Accessories and more!

WESTWARDPARTS.COM

Westward has the part!

Westward has the part!

Westward has the part! That's our commitment to you, and that's what sets us apart. Westward Parts has over 45 years of expertise with all makes of agricultural parts, sprayer parts, sprayers, as well as ground maintenance and estate equipment. Our Canadian dealers are served from three different warehouse locations across the country, and our Australian dealers are served through the MacDon Parts Distribution Centre in Melbourne. Westward Parts offers our dealers the most comprehensive product portfolio and exclusive product offerings. And it will all be delivered on time, with an enjoyable customer service experience that won't let you down.

Westward Parts Distribution:

- **RED DEER, AB**
  Canada
- **REGINA, SK**
  Canada
- **WINNIPEG, MB**
  Canada
- **MELBOURNE**
  Australia

6517 - 67 St.
Red Deer, AB T4P 1A3
1-888-937-7278
Fx: 1-800-661-4508

201 Henderson Dr.
Regina, SK S4N 7E2
1-888-937-7278
Fx: 1-800-721-2977

1435 St. James St.
Winnipeg, MB R3H 0W9
1-888-937-7278
Fx: 1-800-257-8338

WWW.WESTWARDPARTS.COM

How to Order

Welcome to the Westward Parts Sprayer Parts Catalogue!

This catalogue is divided into 9 sections:

1	Nozzles and Nozzle Accessories	
2	Valves and Manifolds	
3	Gauges and Calibration	
4	Fittings & Cam Locks	
5	Hose	
6	Pumps	
7	Spray Guns and Accessories	
8	Tanks and Tank Components	
9	Monitors and Accessories	

Color Coded
For easier navigation!

Westward Parts Authorized Dealers can now order parts in two easy ways!
You can now order by M**anufacturer Number**, or by **Westward Part Number.**

	Online	Phone	Fax
Manufacturer #	-	✓	✓
Westward Part #	✓	✓	✓

Please contact Westward Parts Customer Service Team for assistance.
1-888-937-7278

A cross reference for Manufacturer Part Number/ Westward Parts Number can be found at the back of each section.

Note: Some of the items in this catalogue are not listed with a Westward Parts Number. If you would like to receive a quote or request that we add an item to our catalogue offer, please contact us at 1-888-937-7278 for assistance.

Not a Dealer? Find your dealer at www.WestwardParts.Com/Find-A-Dealer

Sprayer Parts Catalogue

Section 1 - Nozzles and Nozzle Accessories

TeeJet Tips, Caps and Accessories 1-1
Hypro Tips, Caps and Accessories 1-38
Wilger Tips, Caps and Accessories 1-50
GreenLeaf Technologies Tips, Caps and Accessories 1-65
Tip Strainers 1-81
TeeJet Nozzle Bodies and Accessories 1-83
Hypro Nozzle Bodies and Accessories 1-100
Wilger Nozzle Bodies and Accessories 1-107
Inline Strainers 1-118
Banjo Clamps 1-136
TeeJet Clamps 1-138
Wilger Clamps 1-139
Hypro Clamps 1-141
Cross Reference 1-142

Section 2 - Valves and Manifolds

Banjo Micro Valves 2-1
Banjo Ball Valves 2-3
Banjo Nozzle Valves 2-9
Banjo Electric Valves 2-10
Banjo Manifold Valves 2-20
Banjo Manifold Flange Connections 2-24
Banjo Dry-Mates 2-28
Banjo Spinweld Valves 2-32
Banjo FDA Union Valve and Adapter 2-32
TeeJet Electric Valves 2-33
TeeJet Manual Shutoff Ball Valves 2-46
TeeJet Regulating Valves 2-48
TeeJet Valves 2-50
Wilger Boom End Flush Valves 2-51
TIR Solenoid Valves 2-52
Greenleaf Incorporated Poly Shutoff Valves 2-55
Other Brands Valves 2-56
TeeJet Flow Indicators 2-58
Banjo Flow Indicators 2-59
Wilger Flow Indicators 2-60
Cross Reference 2-64

Sprayer Parts Catalogue

Section 3 - Gauges and Calibration

Gauges, Sensors, Wiring 3-1
Calibration Equipment 3-4
Cross Reference 3-6

Section 4 - Fittings & Cam Locks

Couplings 4-1
Fittings 4-33
Hose Barbs, Menders, Sharks 4-55
Garden, Hose Parts, Accessories 4-59
Tank and Tanks Components 4-64
Cable Management 4-70
Sealant / Fastener 4-71
Specialty Strainers 4-72
Cross Reference 4-73

Section 5 - Hose

Chemical Resistant Suction & Discharge Hose - Air Seeder Hose

PVC Suction Hose - Air Seeder Hose 5-1
Poly Rubber Suction 5-1
Medium-duty polyurethane dry material handling hose 5-2
EPDM Hose 5-2
PVC Layflat Hose / Water Discharge PVC 5-3

Petroleum Hose

Farm Tank Hose 5-4
Gravity Tank Hose - Assemblies Without Static Wire 5-4
Farm Fuel Transfer Hose - Assemblies 5-4

Tubing and Accessories

Nylon Tubing/Gauge Tubing 5-5
Non-Reinforced Natural EVA - Boxed 5-5
Reinforced Natural EVA - Bulk 5-5
Non-Reinforced Clear Vinyl - Boxed 5-6

Grain Vac Hose - Material Handling Hose

Material Handling Rubber- ARS Suction 5-7
Bulk Material Handling Hose - Bulk/Uncoupled- Lightweight 5-7

Sprayer Parts Catalogue

Section 5 - Hose

Air, Water, Multi-Purpose Hose

200 PSI Multipurpose (AG200) -Bulk/Uncoupled - EPDM Hose 5-8

300 PSI Multipurpose (AG300) - Bulk/Uncoupled - EPDM Hose 5-8

Series 7093 (Black) GST II General Service Air & Water Hose - EPDM Hose 5-9

General Purpose - PVC Hose 5-9

General Purpose - Wingfoot Hose 5-10

Pressure Washer Hose

Cleaning Equipment 5-10

Section 6 - Pumps, Replacement Parts and Accessories

Ace Pumps

Application Information 6-1

Hydraulic Driven Centrifugal Pumps 6-3

PTO Belt Driven Centrifugal Pumps 6-32

Gasoline Engine Driven Centrifugal Pumps 6-38

Belt Driven Centrifugal Pumps 6-45

Hypro Pumps

Application Information 6-55

Centrifugal Pumps 6-58

Transfer Pumps 6-74

Roller Pumps 6-77

Diaphragm Pumps 6-88

Other Pumps 6-91

Shurflo Pumps 6-93

Piston & Plunger Pumps 6-105

Banjo Pumps

Centrifugal Pumps 6-111

Other Brands Pumps

Diaphragm Pumps 6-117

Electric Diaphragm Pumps 6-122

Cross Reference 6-124

Sprayer Parts Catalogue

Section 7 - Spray Guns, Replacement Parts and Accessories

Hypro Handguns 7-1
TeeJet Handguns 7-2
Other Brands Handguns 7-9
Pressure Washer Parts 7-10
Cross Reference 7-11

Section 8 - Tanks, Tank Components and Accessories

Sprayer Tanks 8-1
Tank Saddles 8-5
Tank Agitator & Eductor 8-6
Tank Cleaning Equipment 8-8
Tank Fittings 8-11

Section 9- Monitors and Accessories

Control Systems 9-1

Westward Parts can source many other special order items that are not listed in this catalogue, please visit our website at **westwardparts.com** or call us directly at **1-888-937-7278.** Our team will help you find what you need.

Parts offered by Westward Parts Services Ltd. are provided by different manufacturers. The use of OEM part numbers are for identification purposes only - No implication is made that the parts are, in fact, the OEM part (unless specified otherwise). The product images shown are for illustration purposes only and may not be an exact representation of the product.

This catalogue is intended for quick reference use. While a great deal of effort has been made to ensure application information, descriptions, and specifications are accurate, Westward Parts Services Ltd. cannot guarantee accuracy as a result of ever-changing model information, product updates, and superseded parts. Westward Parts Services Ltd. will not be liable to any third party should any of the information contained within this catalogue be in error.

Westward has the part!

Application Information

Pumps

Sprayer Plumbing Suggestions

The primary goal when plumbing a sprayer pump is to route liquid from the pump to the spray boom with minimum restriction. Minimizing restrictions is necessary for achieving the pump's maximum rated capacity.

- Hoses should be the same size as the pump's suction and discharge ports.
- Install a pressure gauge and valve on the discharge side of the pump for the purpose of measuring the SHUT-OFF pressure.
- A minimum number of elbows, fittings, and valves should be used to reduce pressure losses.
- Plumb a straight section of hose leading into the suction port equal to 10 times the hose inside diameter.
- (i.e. 1 1/2" hose = 15" of straight hose). Avoid locating electronic spray control valves between the pump and boom.

Following these guidelines is necessary for delivering the highest flow and pressure to the boom.

Useful Calculations and Friction Tables

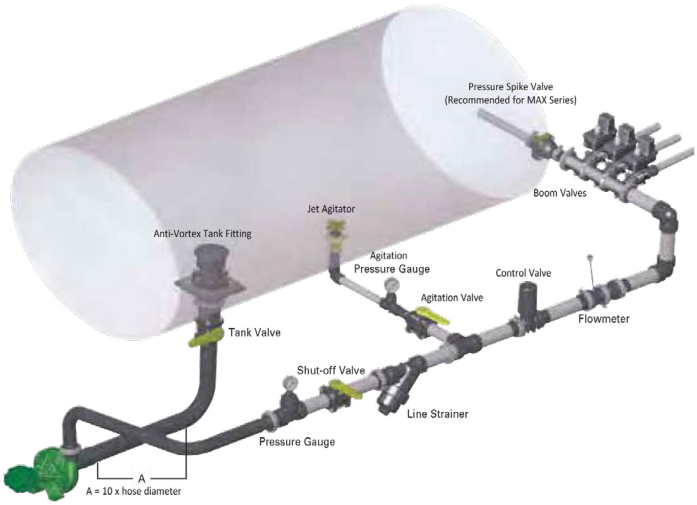

Useful Formulas

$$GPA = \frac{5940 \times GPM\ (per\ Nozzle)}{MPH \times W}$$

$$GPM\ (per\ Nozzle) = \frac{GPA \times MPH \times W}{5940}$$

GPA = Gallons Per Acre
GPM = Gallons Per Minute

MPH = Miles Per Hour
W = Nozzle spacing (in inches) for broadcast spraying
= Spray width (in inches) for single nozzles, band spraying, or boomless spraying
= Row spacing (in inches) divided by the number of nozzles per row for directed spraying.

Pump Mounting

The following are basic guidelines for proper pump mounting:

- The pump should be mounted below the tanks to allow gravity to naturally fill the pump with liquid.
- The volute should be oriented with the discharge port pointing up or across the top of the pump which allows air to rise out of the pump.
- A petcock valve may be installed in the top most pipe plug hole to allow air to be bled off each time the tanks are filled.
- Another vent option is to install a 1/4" air bleed line from the top most pipe plug hole to the sprayer tank. This will continually bleed air from the pump housing.
- If the pump must be located above the liquid level, a check valve should be installed to maintain the pump's prime.

ACE centrifugal pumps are straight centrifugals and must be primed prior to operation. The word "primed" means the pump must be completely full of water and any trapped air vented before operation. Following the pump mounting guidelines will insure proper priming of the pump and avoid premature seal failure.

Specific Gravity

Water weighs 8.34 lbs./gallon and has a specific gravity of 1. Since specific gravity is a ratio of the weight of a liquid compared to the weight of water, the specific gravity of a liquid such as 28% nitrogen fertilizer, which weighs 10.65 lbs./gallon would be figured thus:

$$\frac{10.65\ lbs./gallon}{8.34\ lbs./gallon} = 1.28\ specific\ gravity$$

SOLUTION WEIGHT	SPECIFIC GRAVITY	CONVERSION FACTOR
8.0 lbs./gal.	.96	.98
8.34 lbs./gal.	1.0	1.0
9.0 lbs./gal.	1.08	1.04
10.0 lbs./gal.	1.2	1.1
10.65 lbs./gal.	1.28	1.13
11.0 lbs./gal.	1.32	1.15

All ACE pump capacities (GPM) in this catalog are based on water. When pumping fluids that are heavier than water, pump capacity will be less than stated on each pump performance table. To compensate for pumping heavy liquids, multiply the required pump capacity in GPM times the appropriate conversion factor from the above chart.
EXAMPLE: Required pump capacity is 50 GPM of 28% nitrogen fertilizer.
50 x 1.13 = 56.5 GPM
Then select a pump from the following pages that will deliver 56.5 GPM at the desired pressure. All pump capacities (GPM) in this catalog are based on water. When pumping fluids that are heavier than water, pump capacity will be less than stated on each pump performance table. To compensate for pumping heavy liquids, multiply the required pump capacity in GPM times the appropriate conversion factor from the above chart.
EXAMPLE: Required pump capacity is 50 GPM of 28% nitrogen fertilizer.
50 x 1.13 = 56.5 GPM
Then select a pump from the following pages that will deliver 56.5 GPM at the desired pressure.

Pump Selection Worksheet

1 Fill in the application information:

Application Rate (GPA) _____

Speed (MPH) x _____

Nozzle Spacing (inches) x _____

2 Complete the calculations:

= _____ ÷ 5940 = _____ GPM per Nozzle

x _____ # of Nozzles

= _____ Boom Flow (GPM)

Ag Worksheet

3 Identify the flow required for AGITATION (typically 5% of tank's capacity):

Note: Use of jet agitators may reduce flow needed for agitation.

- 25 GPM — 500 Gallon Tank
- 37 GPM — 750 Gallon Tank
- 50 GPM — 1000 Gallon Tank
- 75 GPM — 1500 Gallon Tank

4 Then add:

Boom Flow (GPM) + Agitation (GPM) = Total Pump Flow (GPM) required

_____ + _____ = _____

5 Adjust for heavier fluids:

Total Pump Flow (GPM) x Specific Gravity Conversion Factor = Adjusted Flow (GPM)

_____ x _____ = _____

See Specific Gravity on opposite page.

6 Find your pump:

- Hydraulic Driven Centrifugal Pumps
- MAX Series Hydraulic Driven Centrifugal Pumps
- PTO Driven Centrifugal Pumps
- Gasoline Engine Driven Centrifugal Pumps
- Belt Driven Centrifugal Pumps (Counterclockwise)
- Belt Driven Centrifugal Pumps (Clockwise)
- Electric Motor Driven Centrifugal Pumps
- ACE/VALVTEC™ Ball Valves

Pump Options Key

- SC — Severe Duty Silicon Carbide Shaft Seal
- CI — Cast Iron Impeller
- PI — Polypropylene Impeller
- SI — 316 Stainless Steel Impeller
- BSP — British Standard Pipe Thread

Hydraulic Driven Centrifugal Pumps

General Advantages

Ace developed the first hydraulic motor driven pump at the request of John Deere in 1969. Many of the original pumps are still operating today after more than 30 years of service.

Centrifugal pump design provides good resistance to abrasive solutions and extra flow for agitation. The advantages of the hydraulic motor driven pump are mounting versatility, customized performance, and ease of maintenance. All hydraulic driven pumps are equipped with a stainless steel shaft and wear ring for excellent corrosion resistance.

Mounting Versatility: The location of the pump is not tied to the PTO or engine drive shaft; the pump can be mounted in a variety of locations to suit application requirements.

Customized Performance: The performance is dependent on the supply of hydraulic oil to the motor and not necessarily tied to engine speed. A hydraulic driven pump can produce higher pressures than PTO or belt driven pumps. They can also hold constant pressure at varying engine speeds on closed center hydraulic systems.

Easy Maintenance: On a hydraulic driven pump there are no belts to align or break. Separate pump and hydraulic motor shafts simplify repair and replacement. Two main pump bearings support shaft loads. All pumps are equipped with easily replaceable Viton® mechanical seals.

The Ace gear type hydraulic motor is more efficient than gerotor type motors, and is less subject to damage by contamination than the gerotor design. A built-in needle valve allows for the bypass of up to 9 GPM excess hydraulic fluid on open center systems. The standard motor has a reverse flow check valve which prevents backward hookup and a coasting check which protects the motor seal from the flywheel effect of the impeller. A restrictor orifice is included with pump models recommended for pressure compensating closed center systems.

FMC-75-HYD-204
FMC-75-HYD-206

- Suction 1” NPT x Discharge 3/4” NPT
- Designed for starter fertilizer and small sprayer applications
- Replaces 12V diaphragm pumps and roller pumps
- Tall Blade Impeller design - higher pressure at lower speed
- All Polypropylene corrosion resistant construction
- **The 204R motor** requires 4 GPM (15.1 LPM) maximum hydraulic fluid input

Recommended for:
– Pressure Compensating Closed Center Systems
– Open Center Systems up to 13 GPM (49.2 LPM) using internal needle valve

- **The 206R motor** requires 7 GPM (26.5 LPM) maximum hydraulic fluid input

Recommended for:
- Pressure Compensating Closed Center Systems
- Load Sensing Closed Center Systems
- Open Center Systems up to 16 GPM (60.6 LPM) using internal needle valve

1”	3/4”
SUCTION	DISCHARGE

Maximum Flow: 27 GPM (102 LPM)
Maximum Pressure: 100 PSI (6.9 BAR)

Performance Chart

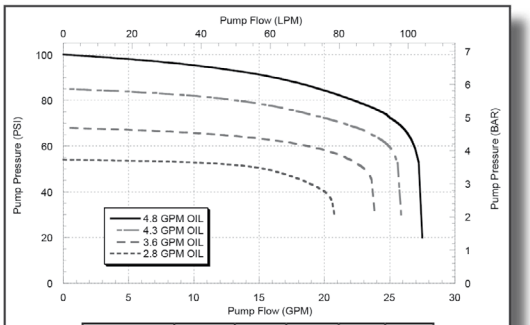

Oil Flow	GPM	4.8	4.3	3.6	2.8
Conversion	LPM	18.2	16.3	13.6	10.6

Maximum Shutoff Pressure 100 PSI (6.9 bar)
Note: Performance for pump with 204 motor.

Dimensions

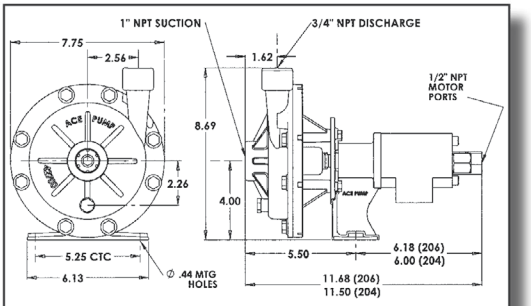

INCHES	11.68	11.50	8.69	7.75	6.18	6.13	6.00
MM	296.7	292.1	220.7	196.9	157.0	155.7	152.4

INCHES	5.50	5.25	4.00	2.56	2.26	1.62
MM	139.7	133.4	101.6	65.0	57.4	41.1

OIL FLOW	
GPM	LPM
4.8	18.2
4.3	16.3
3.6	13.6
2.8	10.6

*See following page for part’s breakdown information.

Continued on next Page

Hydraulic-Driven Centrifugal Pumps

FMC-75-HYD

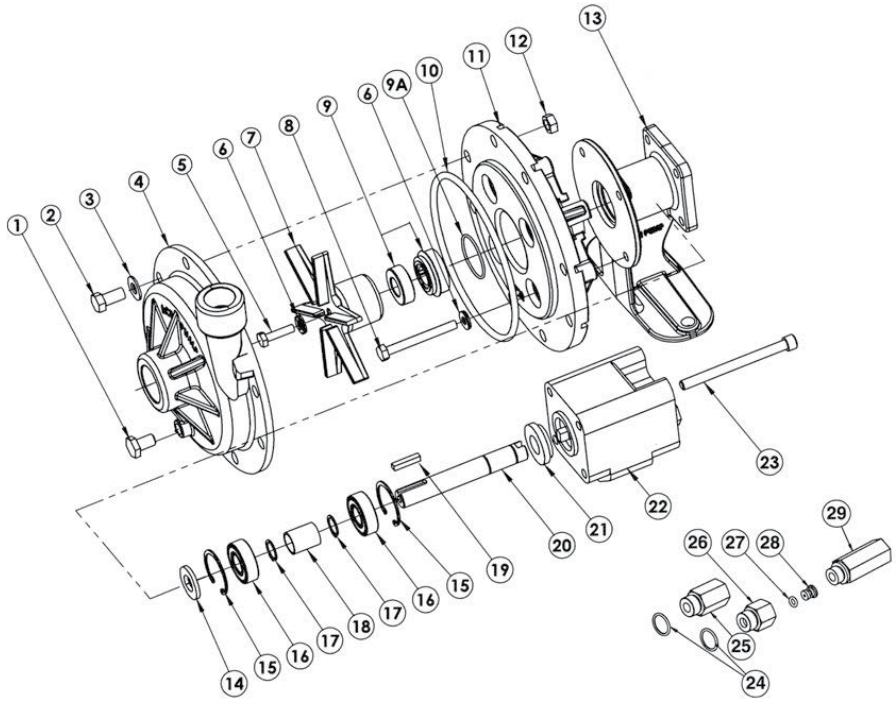

REF. #	MNF PART NO.	EDP #	DESCRIPTION	REQ.
1	BAC-53-P	41109	Pipe plug, 1/8" NPT, plastic	1
2	80250	80250	Cap screw, 3/8"-16 x 7/8", hex head	8
3	42701	42701	Washer, 3/8" flat	8
4	GE-12-75	42700	Volute, 3/4" x 1", polypropylene	1
5	42240	42240	Cap screw, 1/4"-28 x 1", hex, stainless steel	1
6①②	30028	30028	Washer, sealing	5
7	GE-26-75	42710	Impeller, with keyway, polypropylene	1
8	42238	42238	Cap screw, 5/16"NF x 2-1/4"	4
9①	BAC-7-75V	42730	Seal, 5/8" , Viton®/carbon/ceramic	1
9②	BAC-7SC-75V	42731	Seal, 5/8" , Viton®/silicon carbide (optional)	1
9A①②	40159	40159	"O" Ring, seal seat	1
10①②	40017	40017	"O" Ring, volute seal	1
11	GE-14-75	42720	Bracket, polypropylene	1
12	BAC-45	41010	Nut, hex, 3/8"	8
13	BAC-14-75-HYD	40293	Mounting frame (for BAC-75-HYD-204R, 206R hydraulic motor)	1
14	BAC-54	41130	Slinger	1
15	BAC-33	40810	Snap ring, internal, BAC-14 mounting frame	2
16	BAC-37	40870	Bearing, BAC-6 driven shaft	2
17	BAC-32	40790	Snap ring, external, BAC-6 driven shaft	2
18	BAC-32-S	40795	Spacer for BAC-6 shaft	1
19	41082	41082	Key, 3/16" x 3/16" x 15/16"	1
20	BAC-6-75-HYD-SS	40048	Shaft, 5/8" Driven shaft with tang slot, stainless steel	1
21	S200	40161	Seal support spacer for 200 series hydraulic lip seal	1
22	BAC-75-HYD-204R	41437	Hydraulic motor, 4 GPM	1
22	BAC-75-HYD-206R	41438	Hydraulic motor, 7 GPM	1
23	41253	41253	Cap screw, 5/16" NC x 3 1/2" socket head (for 204 motor) Cap	4
23	41255	41255	screw, 5/16" NC x 3 3/4" socket head (for 206 motor)	4
24	41875	41875	O-ring, #8 SAE fitting	2
25	BAC-78-8SAE	41441	Reverse check assembly, #8 SAE male x 1/2" NPT female Body,	1
26	BAC-80-8SAE	41455	restrictor orifice, #8 SAE male x 1/2" NPT female	1
27	41448	41448	O-ring, orifice insert	1
28	BAC-79-5	41457	Orifice, restrictor insert, .078 (204)	1
28	BAC-79-7	41456	Orifice, restrictor insert, .109 (206)	1
29	LS-204N	41417	Flow limiting valve (204), #8 SAE male x 1/2" NPT female Flow	1
29	LS-206N	41418	limiting valve (206), #8 SAE male x 1/2" NPT female Repair kit for	1
①	RK-GE-75	60840	FMC-75-HYD series	-
②	RK-GESC-75	60841	Repair kit for FMC-75-HYD series with silicon carbide shaft seal	-
*	RK-BAC-75-HYD-L	43174	Repair kit for 200 series motor	-

How to order:
Specify Mfr Part Number
Example: 42238

Hydraulic-Driven Centrifugal Pumps

FMC-HYD-202
FMC-HYD-203

- **The 202 Motor** requires 2 GPM hydraulic flow LS Closed and Open Center Systems
- **The 203 Motor** requires 2 GPM hydraulic flow LS Closed and Open Center Systems
- Integral Needle Valve bypasses up to 9 GPM on Open Center Systems
- Standard Viton® Carbon/Ceramic seal or Optional Severe Duty Silicon Carbide Mechanical Seal
- Chemical Resistant Valox® or Optional Cast Iron Impeller
- Stainless Steel Shaft and Wear Ring

Recommended for:
– Engineered systems with limited oil flow

SC CI BSP

1-1/4''	1''
SUCTION	DISCHARGE

Maximum Flow: 92 GPM (350 LPM)
Maximum Pressure: 100 PSI (6.9 BAR)

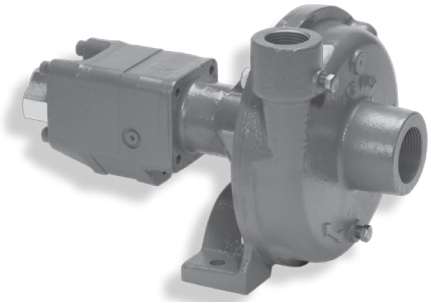

Performance Chart

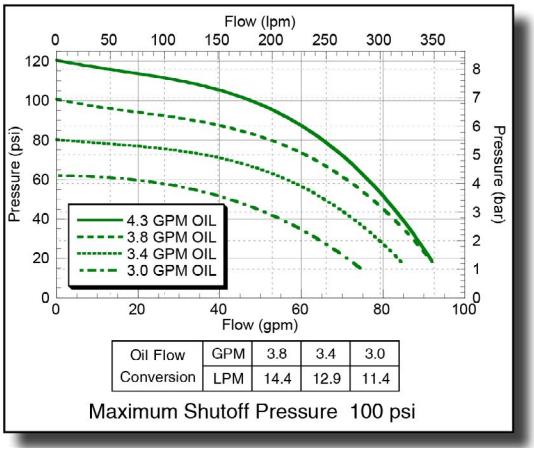

Oil Flow Conversion	GPM	3.8	3.4	3.0
	LPM	14.4	12.9	11.4

Maximum Shutoff Pressure 100 psi

Dimensions

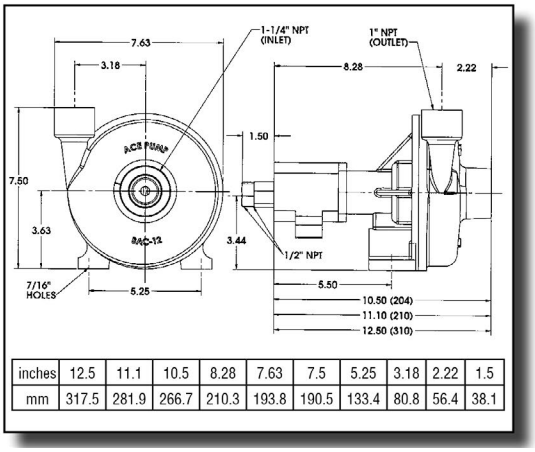

inches	12.5	11.1	10.5	8.28	7.63	7.5	5.25	3.18	2.22	1.5
mm	317.5	281.9	266.7	210.3	193.8	190.5	133.4	80.8	56.4	38.1

OIL FLOW	
GPM	LPM
3.8	14.4
3.4	12.9
3.0	11.4

*See following page for part's breakdown information.

Westward Parts can source many other special order items that are not listed in this catalogue, please visit our website at westwardparts.com or call us directly at 1-888-937-7278. Our team will help you find what you need.
The product images shown are for illustration purposes only and may not be an exact representation of the product.

Continued on next Page

Hydraulic-Driven Centrifugal Pumps

FMC-HYD-202
FMC-HYD-203

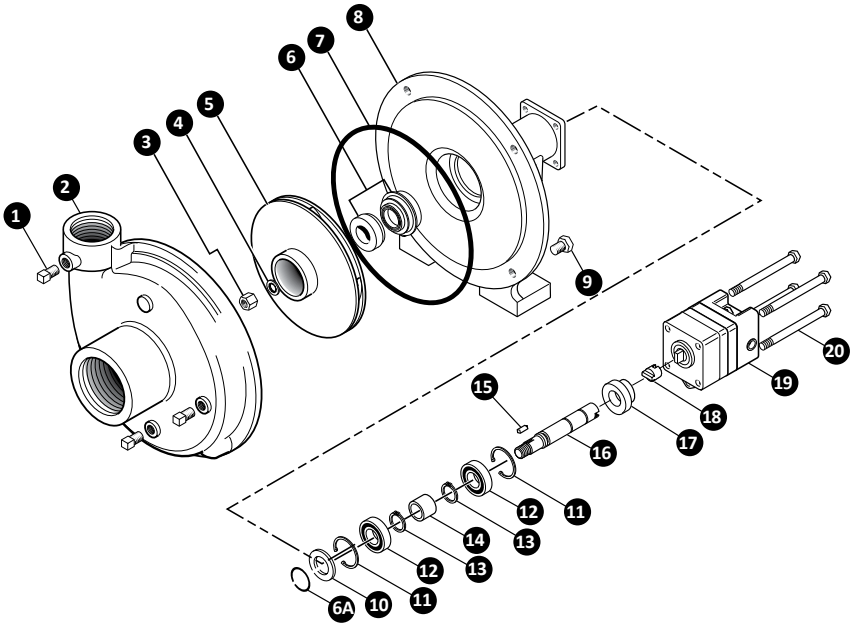

REF. #	MNF PART NO.	EDP #	DESCRIPTION	REQ.
1	41110	41110	Pipe plug	3
1	41120	41120	Pipe plug, stainless steel (optional)	3
2	BAC-12	40250	Volute, 1 1/4" x 1"	1
3	BAC-23-A	40391	Nut, 3/8" NF, cad plated Washer,	1
4	BAC-24-HYD-SS	40400	3/8" star, stainless steel	1
5	BAC-26-HYD-VALOX	40440	Impeller, Valox, keyway	1
5	BAC-26-HYD-CI	40442	Impeller, cast iron, keyway (optional)	1
*6	BAC-7V	40151	Seal, mechanical, Viton (includes 40160)	1
6	BAC-7SC	40152	Seal, mechanical, silicon carbide (includes 40160), optional	1
6A	40160	40160	O-ring, shaft seal	1
*7	BAC-4	40010	Gasket, 4 hole, (obsolete 1996)	1
*7	BAC-4A	40005	O-ring, body seal	1
8	BAC-14-HYD	40300	Mounting frame (for -200 Series hydraulic motors)	1
9	40950	40950	Cap screw, 3/8" NC x 3/4" hex head	4
9	40930	40930	Cap screw, 3/8" NC x 3/4" hex head, stainless steel (optional)	4
10	BAC-54	41130	Slinger	1
11	BAC-33	40810	Snap ring, internal, BAC-14 mounting frame	2
12	BAC-37	40870	Ball bearing, sealed, BAC-6 shaft	2
13	BAC-32	40790	Snap ring, external, BAC-6 shaft	2
14	BAC-32-S	40795	Spacer for BAC-6 shaft	1
15	BACH-25	40420	Key, 1/8" x 1/8" x 1/2"	1
16	BAC-6-HYD	40060	Shaft, 5/8" diameter, keyway and tang slot (optional)	1
16	BAC-6-HYD-SS	40061	Shaft, 5/8" diameter, keyway and tang slot, stainless steel	1
17	S200	40161	Seal support spacer, 200 Series motor lip seal; effective 6/00	1
18	BAC-76-HYD	41380	Coupling for hydraulic motor	1
19	BAC-75-HYD-202	41368	Hydraulic motor, 2 GPM	1
19	BAC-75-HYD-203	41367	Hydraulic motor, 3 GPM	1
20	41256	41256	Cap screw, 5/16" NC x 3 1/2" hex head (for 204 and 203 motor)	4
20	41250	41250	Cap screw, 5/16" NC x 3 1/4" hex head (for 202 motor)	4
#	RK-FMC	52700	Repair kit for FMC series pump	1
#	RK-BAC-75-HYD	41371	Repair kit for 202, 203, 204, 206, and 210 motor	1
#	RD-BAC-75-HYD-L	41374	Repair kit for 200 series HYD motors equipped with Teflon lip seal	1

* Items included in pump repair kit.

How to order:
Specify Mfr Part Number
Example: 40400

Hydraulic-Driven Centrifugal Pumps

FMC-HYD-204
FMC-HYD-206
FMC-HYD-210
FMC-HYD-310

1-1/4"	1"
SUCTION	DISCHARGE

Maximum Flow: 92 GPM (350 LPM)
Maximum Pressure: 100 PSI (6.9 BAR)

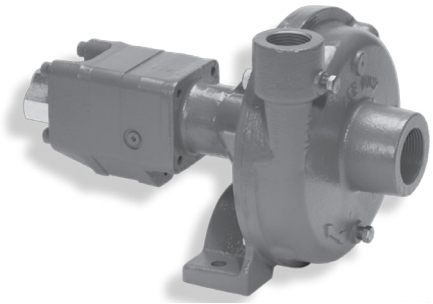

- **The 204 Motor** requires 4 GPM (15.1 LPM) maximum hydraulic fluid input

Recommended for:
– Pressure Compensating Closed Center Systems
– Open Center Systems up to 13 GPM (49.2 LPM) using internal needle valve bypass

- **The 206 motor** requires 7 GPM (26.5 LPM) maximum hydraulic fluid input and fits virtually all tractor hydraulic systems

Recommended for:
– Pressure Compensating Closed Center Systems
– Load Sensing Closed Center Systems
– Open Center Systems up to 16 GPM (60.6 LPM) using internal needle valve bypass

- **The 210 Motor** requires 10 GPM (37.9 LPM) maximum hydraulic fluid input

Recommended for:
– Load Sensing Closed Center Systems
– Open Center Systems up to 17 GPM (64.4 LPM) using internal needle valve bypass

- **The 310 Motor** requires 17.5 GPM (66.2 LPM) maximum hydraulic fluid input

Recommended for:
– Large Open Center Systems up to 26.5 GPM (100 LPM) using internal needle valve bypass

Performance Chart

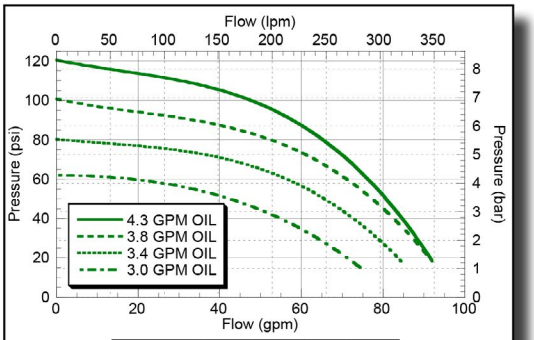

Oil Flow Conversion	GPM	3.8	3.4	3.0
	LPM	14.4	12.9	11.4

Maximum Shutoff Pressure 100 psi

Dimensions

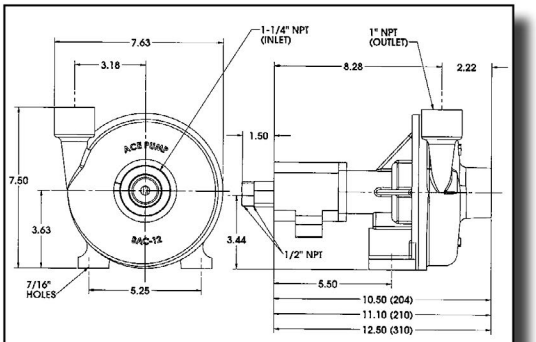

inches	12.5	11.1	10.5	8.28	7.63	7.5	5.25	3.18	2.22	1.5
mm	317.5	281.9	266.7	210.3	193.8	190.5	133.4	80.8	56.4	38.1

OIL FLOW	
GPM	LPM
3.8	14.4
3.4	12.9
3.0	11.4

*See following page for part's breakdown information.

Westward Parts can source many other special order items that are not listed in this catalogue, please visit our website at westwardparts.com or call us directly at 1-888-937-7278. Our team will help you find what you need.
The product images shown are for illustration purposes only and may not be an exact representation of the product.

Continued on next Page

Hydraulic-Driven Centrifugal Pumps

FMC-HYD-204
FMC-HYD-206
FMC-HYD-210
FMC-HYD-310

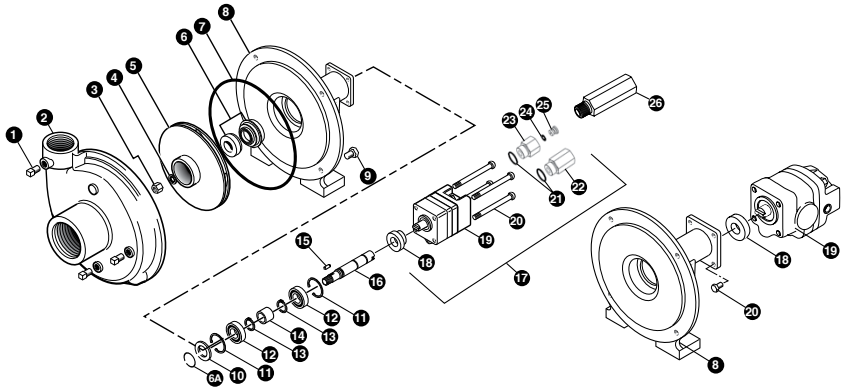

REF. #	MNF PART NO.	EDP #	DESCRIPTION	REQ.
1	BAC-53	41110	Pipe plug	4
1	41120	41120	Pipe plug, stainless steel (optional)	4
2	BAC-12	40250	Volute, 1-1/4” x 1”, cast iron	1
3	BAC-23-A	40391	Nut, 3/8” NF, cad plated	1
3	BAC-23-A-SS	40392	Nut, 3/8” NF, stainless steel (optional)	1
4①②	BAC-24-HYD-SS	40400	Washer, 3/8” star, stainless steel	1
5	BAC-26-HYD-VALOX	40440	Impeller, Valox, keyway	1
5	BAC-26-HYD-CI	40442	Impeller, cast iron, keyway (optional)	1
6①	BAC-7V	40151	Seal, carbon/ceramic/Viton (includes 40160 O-Ring)	1
6②	BAC-7SC	40152	Seal, silicon carbide/Viton (includes 40160 O-Ring) (optional)	1
6A①②	40160	40160	O-ring, shaft seal	1
7①②	BAC-4A	40005	O-ring, body seal	1
8	BAC-14-HYD	40300	Mounting frame, cast iron (for 200 Series hydraulic motor)	1
8	BAC-14-HYD-300A	40314	Mounting frame, cast iron (for 300A Series hydraulic motor)	1
9	40950	40950	Cap screw, 3/8” NC x 3/4” hex head	4
9	40930	40930	Cap screw, 3/8” NC x 3/8” hex head, stainless steel (optional)	4
10	BAC-54	41130	Slinger	1
11	BAC-33	40810	Snap ring, internal, BAC-14 mounting frame	2
12	BAC-37	40870	Ball Bearing, sealed, BAC-6 shaft	2
13	BAC-32	40790	Snap ring, external, BAC-6 shaft	2
14	BAC-32-S	40795	Spacer for BAC-6 shaft	1
15	BACH-25	40420	Key, 1/8” x 1/8” x 1/2”	1
16	BAC-6-HYD-SS	40061	Shaft, 5/8” diameter, keyway and tang slot, stainless steel	1
17	BAC-75-HYD-204	41370	Hydraulic motor, 4 GPM (includes parts 18 - 25)	1
17	BAC-75-HYD-210	41375	Hydraulic motor, 10 GPM (includes parts 18 - 25)	1
18	S200	40161	Seal support spacer for 200 Series HYD motor	1
18	S300	40162	Seal support spacer for 300 Series HYD motor	1
19	BAC-75-HYD-204N	41433	Hydraulic motor, 4 GPM (motor only - no external fittings)	1
19	BAC-75-HYD-210N	41434	Hydraulic motor, 10 GPM (motor only - no external fittings)	1
19	BAC-75-HYD-310	41378	Hydraulic motor, 16 GPM (310A motor effective March 2006)	1
20	41253	41253	Cap screw, 5/16” N. C. x 3-1/2” socket head (for 204N motor)	4
20	41254	41254	Cap screw, 5/16” N. C. x 4” socket head (for 210N motor)	4
20	41330	41330	Cap screw, 5/16” N. C. x 3/4” hex head (for 310 motor)	4
21	41875	41875	O-ring, #8 SAE fitting	2
22	BAC-78-8SAE	41441	Reverse check valve, #8 SAE male x 1/2” NPT female	1
23	BAC-80-8SAE	41455	Adapter, restrictor body, #8 SAE male x 1/2” NPT female	1
24	41448	41448	O-ring, orifice insert	1
25	BAC-79-5	41457	Orifice, restrictor insert, .078 (204N)	1
25	BAC-79-7	41456	Orifice, restrictor insert, .109 (210N)	1
26	LS-204N	41417	Flow limiting valve (204N), #8 SAE male x 1/2” NPT female	1
26	LS-210N	41423	Flow limiting valve (210N), #8 SAE male x 1/2” NPT female	1
①	RK-FMC	52700	Repair kit for FMC series pump	-
②	RK-FMCSC	52706	Repair kit for FMC series with silicon carbide shaft seal	-
#	RK-BAC-75-HYD-L	41374	Repair kit for 200 series motor with high pressure lip seal	-
#	RK-BAC-75-HYD-300-L	41362	Repair kit for 310 motor with high pressure lip seal	-

How to order:
Specify Mfr Part Number
Example: 41120

Hydraulic-Driven Centrifugal Pumps

FMC-150-HYD-206

Provides higher pressure and greater volume for applications with large tanks and longer spray booms

- **The 206 Motor** requires 7 GPM (26.5 LPM) maximum hydraulic fluid input and fits virtually all tractor hydraulic systems

Recommended for:
– Pressure Compensating Closed Center Systems
– Load Sensing Closed Center Systems
– Open Center Systems up to 16 GPM (60.6 LPM) using internal needle valve bypass

SC CI PI BSP

1-1/2"	1-1/4"
SUCTION	DISCHARGE

Maximum Flow: 135 GPM (511 LPM)
Maximum Pressure: 120 PSI (8.3 BAR)

ACE PUMPS
150 SERIES
HIGH PERFORMANCE

Performance Chart

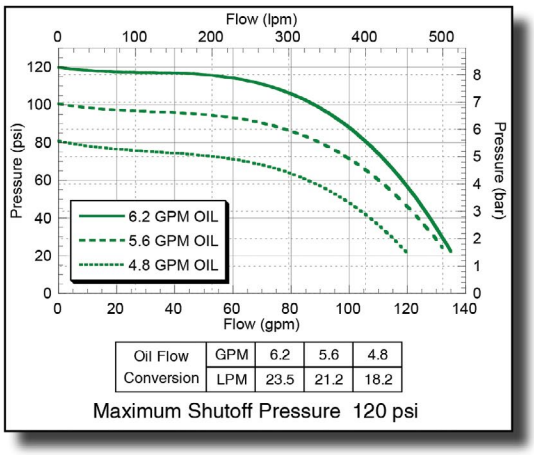

Oil Flow Conversion	GPM	6.2	5.6	4.8
	LPM	23.5	21.2	18.2

Maximum Shutoff Pressure 120 psi

Dimensions

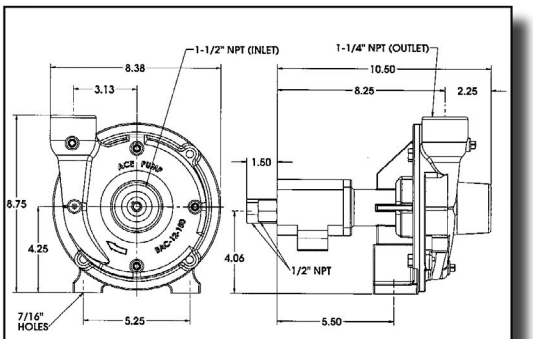

inches	10.5	8.75	8.38	8.25	5.5	5.25	4.25	3.13	1.5
mm	266.7	222.3	212.9	209.6	139.7	133.4	108	79.5	38.1

OIL FLOW	
GPM	LPM
6.2	23.5
5.6	21.2
4.8	18.2

*See following page for part's breakdown information.

Westward Parts can source many other special order items that are not listed in this catalogue, please visit our website at westwardparts.com or call us directly at 1-888-937-7278. Our team will help you find what you need.
The product images shown are for illustration purposes only and may not be an exact representation of the product.

Continued on next Page

Hydraulic-Driven Centrifugal Pumps

FMC-150-HYD-206

ACE PUMPS

150 SERIES HIGH PERFORMANCE

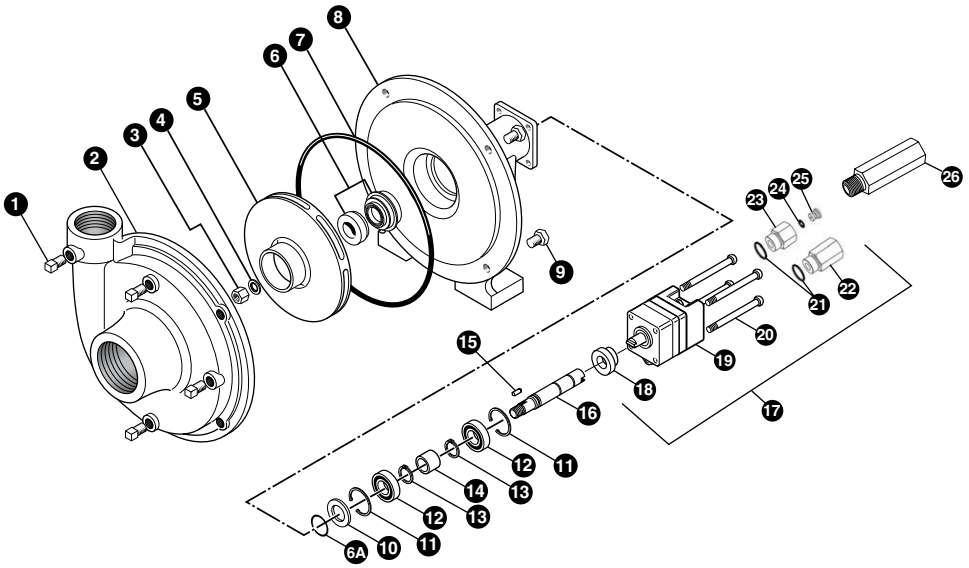

REF. #	MNF PART NO.	EDP #	DESCRIPTION	REQ.
1	BAC-53	41110	Pipe plug	4
1	41120	41120	Pipe plug, stainless steel (optional)	4
2	BAC-12-150	40255	Volute, 1-1/2” x 1-1/4”	1
3	BAC-23-A	40391	Nut, 3/8” NF, cad plated	1
3	BAC-23-B-SS	40393	Nut, 3/8” NF, stainless steel (standard on -SS models)	1
4①②	BAC-24-HYD-SS	40400	Washer, 3/8” star, stainless steel	1
4	BAC-24-B-SS	42702	Washer, 3/8”, stainless steel, vibration proof (standard on -SS models)	1
5	BAC-26-150-P	40446	Impeller,Valox, keyway	1
5	BAC-26-150-CI	40445	Impeller, cast iron, keyway (optional)	1
5	BAC-26-150-PI	40448	Impeller, polypropylene, keyway (optional)	1
6①	BAC-7V BAC-7SC	40151	Seal, carbon/ceramic/Viton (includes 40160 O-ring)	1
6②		40152	Seal, silicon carbide/Viton (includes 40160 O-ring) (optional)	1
6A①②	40160	40160	O-ring, shaft seal	1
7①②	BAC-4-150	40015	O-ring, body seal	1
8	BAC-14-150-HYD	40305	Mounting frame (for 200 Series hydraulic motor)	1
9	40950	40950	Cap screw, 3/8” NC x 3/4” hex head	4
9	40930	40930	Cap screw, 3/8” NC x 3/4” hex head, stainless steel (optional)	4
10	BAC-54	41130	Slinger	1
11	BAC-33	40810	Snap ring, internal, BAC-14 mounting frame	2
12	BAC-37	40870	Ball Bearing, sealed, BAC-6 shaft	2
13	BAC-32	40790	Snap ring, external, BAC-6 shaft	2
14	BAC-32-S	40795	Spacer for BAC-6 shaft	1
15	BACH-25	40420	Key, 1/8” x 1/8” x 1/2”	1
16	BAC-6-HYD-SS	40061	Shaft, 5/8” diameter, keyway and tang slot, stainless steel	1
17	BAC-75-HYD-206	41372	Hydraulic motor, 7 GPM (includes parts 18 - 25)	1
18	S200	40161	Seal support spacer for 200 Series HYD motor	1
19	BAC-75-HYD-206N	41397	Hydraulic motor, 7 GPM (motor only - no external fittings) Cap	1
20	41255	41255	screw, 5/16” N. C. x 3-3/4” socket head (for 206N motor)	4
21	41875	41875	O-ring, #8 SAE fitting	2
22	BAC-78-8SAE	41441	Reverse check valve, #8 SAE male x 1/2” NPT female	1
23	BAC-80-8SAE	41455	Adapter, restrictor body, #8 SAE male x 1/2” NPT female	1
24	41448	41448	O-ring, orifice insert	1
25	BAC-79-7	41456	Orifice, restrictor insert, .109 (206N)	1
26	LS-206N	41418	Flow limiting valve (206N), #8 SAE male x 1/2” NPT female	1
①	RK-FMC-150 RK-	52710	Repair kit for FMC-150 series pump	-
②	FMCSC-150 RK-	52711	Repair kit for FMC-150 series with silicon carbide shaft seal	-
#	BAC-75-HYD-L	41374	Repair kit for 200-L Series motor	-

How to order:
Specify Mfr Part Number
Example: 40151

Hydraulic-Driven Centrifugal Pumps

FMC-150F-HYD-206
FMC-150FS-HYD-206
FMC-150F-HYD-304

- **F Model** equipped with NPT ports and industry standard flanged connections
- **FS Model** constructed of 316 stainless steel with NPT ports and industry standard flanged connections applications.
- Provides higher pressure and greater volume for applications with large tanks and longer spray booms
- **The 206 Motor** requires 7 GPM (26.5 LPM) maximum hydraulic fluid input and fits virtually all tractor hydraulic systems

Recommended for:
–Pressure Compensating Closed Center Systems
–Load Sensing Closed Center Systems
–Open Center Systems up to 16 GPM (60.6 LPM) using internal needle valve bypass

- **The 304 Motor** requires 11 GPM (41.6 LPM) maximum hydraulic fluid input

Recommended for:
–Pressure Compensating Closed Center Systems
–Load Sensing Closed Center Systems
–Open Center Systems up to 20 GPM (75.7 LPM) using internal needle valve bypass

SC CI PI

1-1/2" 220 Flange	1-1/4" 200 Flange
SUCTION	DISCHARGE

Maximum Flow: 145 GPM (549 LPM)
155 GPM (587 LPM) for 304
Maximum Pressure: 120 PSI (8.3 BAR)
130 PSI (9 BAR) for 304

ACE PUMPS
150 SERIES HIGH PERFORMANCE

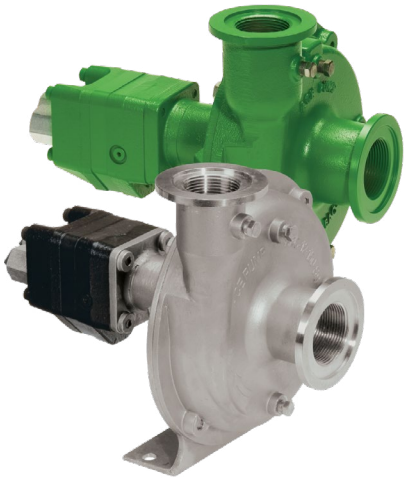

Performance Chart

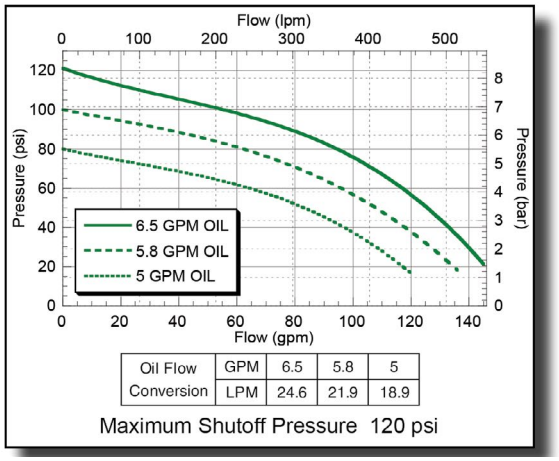

Oil Flow Conversion	GPM	6.5	5.8	5
	LPM	24.6	21.9	18.9

Maximum Shutoff Pressure 120 psi

*See following pages for part's breakdown information.

Dimensions

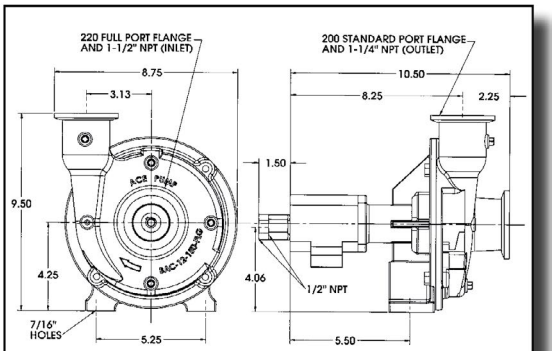

inches	10.5	9.5	8.75	8.25	5.5	5.25	4.25	3.13	1.5
mm	266.7	241.3	222.3	209.6	139.7	133.4	108	79.5	38.1

OIL FLOW	
GPM	LPM
6.5	24.6
5.8	21.9
5	18.9

Westward Parts can source many other special order items that are not listed in this catalogue, please visit our website at westwardparts.com or call us directly at 1-888-937-7278. Our team will help you find what you need.
The product images shown are for illustration purposes only and may not be an exact representation of the product.

Continued on next Page

Hydraulic-Driven Centrifugal Pumps

FMC-150F-HYD-206
FMC-150FS-HYD-206

ACE PUMPS
150 SERIES
HIGH PERFORMANCE

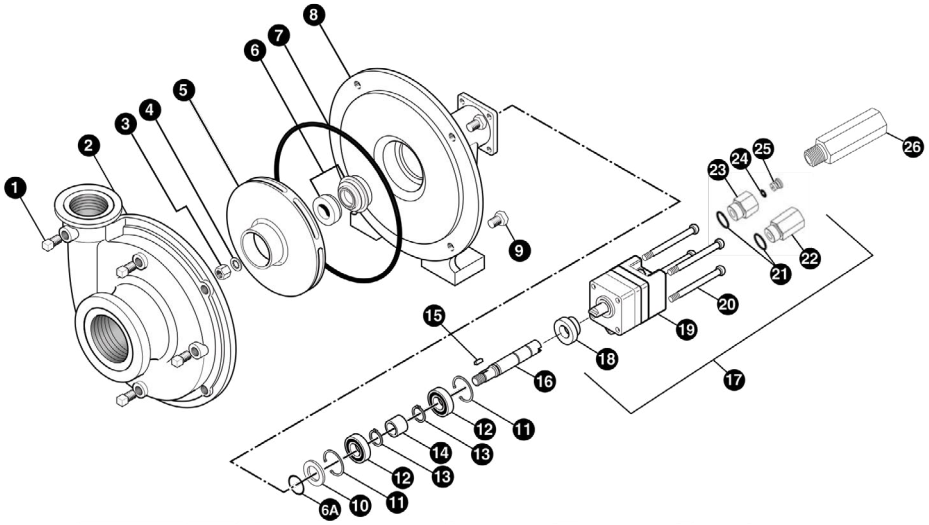

REF. #	MNF PART NO.	EDP #	DESCRIPTION	REQ.
1	BAC-53	41110	Pipe plug	4
1	41120	41120	Pipe plug, stainless steel (optional)	4
2	BAC-12-150-FLG	40257	Volute, cast iron, NPT & flanged (for 150F models)	1
2	BAC-12-150-SS	40249	Volute, 316 stainless steel , NPT & flanged (for 150FS models)	1
3	BAC-23-A	40391	Nut, 3/8" NF, cad plated	1
3	BAC-23-B-SS	40393	Nut, 3/8" NF, stainless steel (standard on FS and -SS models)	1
4①②	BAC-24-HYD-SS	40400	Washer, 3/8" star, stainless steel	1
4	BAC-24-B-SS	42702	Washer, 3/8", stainless steel, vibration proof (standard on FS and -SS models)	1
5	BAC-26-150-P	40446	Impeller, Valox, keyway	1
5	BAC-26-150-CI	40445	Impeller, cast iron, keyway (optional)	1
5	BAC-26-150-PI	40448	Impeller, polypropylene, keyway (optional)	1
6①	BAC-7V	40151	Seal, carbon/ceramic/Viton (includes 40160 O-Ring)	1
6②	BAC-7SC	40152	Seal, silicon carbide/Viton (includes 40160 O-Ring) (optional)	1
6A①②	40160	40160	O-ring, shaft seal	1
7①②	BAC-4-150	40015	O-ring, body seal	1
8	BAC-14-150-HYD	40305	Mounting frame, cast iron (for 150F models)	1
8	BAC-14-150-HYD-SS	40319	Mounting frame, 316 stainless steel (for 150FS models) Cap screw,	1
9	40950	40950	3/8" NC x 3/4" hex head	4
9	40930	40930	Cap screw, 3/8" NC x 3/4" hex head, stainless steel (optional)	4
10	BAC-54	41130	Slinger	1
11	BAC-33	40810	Snap ring, internal, BAC-14 mounting frame	2
12	BAC-37	40870	Ball Bearing, sealed, BAC-6 shaft	2
13	BAC-32	40790	Snap ring, external, BAC-6 shaft	2
14	BAC-32-S	40795	Spacer for BAC-6 shaft	1
15	BACH-25	40420	Key, 1/8" x 1/8" x 1/2"	1
16	BAC-6-HYD-SS	40061	Shaft, 5/8" diameter, keyway and tang slot, stainless steel	1
17	BAC-75-HYD-206	41372	Hydraulic motor, 7 GPM (includes parts 18 - 25)	1
18	S200	40161	Seal support spacer for 200 Series HYD motor	1
19	BAC-75-HYD-206N	41397	Hydraulic motor, 7 GPM (motor only - no external fittings) Cap	1
20	41255	41255	screw, 5/16" N. C. x 3-3/4" socket head (for 206N motor)	4
21	41875	41875	O-ring, #8 SAE fitting	2
22	BAC-78-8SAE	41441	Reverse check valve, #8 SAE male x 1/2" NPT female	1
23	BAC-80-8SAE	41455	Adapter, restrictor body, #8 SAE male x 1/2" NPT female	1
24	41448	41448	O-ring, orifice insert	1
25	BAC-79-7	41456	Orifice, restrictor insert, .109 (206N)	1
26	LS-206N	41418	Flow limiting valve (206N), #8 SAE male x 1/2" NPT female	1
①	RK-FMC-150	52710	Repair kit for FMC-150 series pump	-
②	RK-FMCSC-150	52711	Repair kit for FMC-150 series with silicon carbide shaft seal	-
#	RK-BAC-75-HYD-L	41374	Repair kit for 200-L Series motor	-

How to order:
Specify Mfr Part Number
Example: 40870

Continued on next Page

Hydraulic-Driven Centrifugal Pumps

FMC-150F-HYD-304

ACE PUMPS

150 SERIES HIGH PERFORMANCE

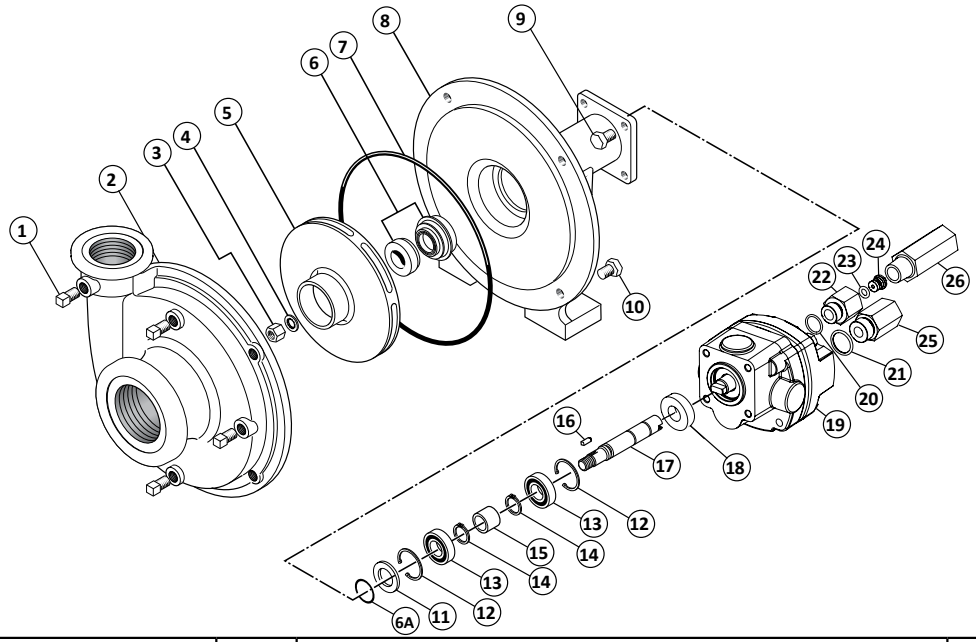

REF. #	MNF PART NO.	EDP #	DESCRIPTION	REQ.
1	BAC-53	41110	Pipe plug	4
1	41120	41120	Pipe plug, stainless steel (optional)	4
2	BAC-12-150-FLG	40257	Volute, 1-1/2" NPT & 220 flange x 1-1/4" NPT & 200 flange	1
3	BAC-23-A	40391	Nut, 3/8" NF, cad plated	1
3	BAC-23-B-SS	40393	Nut, 3/8" NF, SS (optional)	1
4	BAC-24-HYD-SS	40400	Washer, 3/8" star, stainless steel	1
4	BAC-24-B-SS	42702	Washer, 3/8" SS, vibration proof (optional)	1
5	BAC-26-150-P	40446	Impeller,Valox, keyway	1
5	BAC-26-150-CI	40445	Impeller, cast iron, keyway (optional)	1
5	BAC-26-150-PI	40448	Impeller, polypropylene, keyway (optional)	1
6①	BAC-7V	40151	Seal, mechanical, Viton (includes 40160 O-Ring)	1
6②	BAC-7SC	40152	Seal, mechanical, silicon carbide (includes 40160 O-Ring) (optional)	1
6A①②	40160	40160	O-ring, shaft seal	1
7①②	BAC-4-150	40015	O-ring, body seal	1
8	BAC-14-150-HYD-300	40304	Mounting frame (for 300 Series hydraulic motor)	1
9	41330	41330	Cap screw, 5/16" N. C. x 3/4" Hex head (for 304 motor) Cap screw,	4
10	40950	40950	3/8" NC x 3/4" hex head	4
10	40930	40930	Cap screw, 3/8" NC x 3/4" hex head, stainless steel (optional)	4
11	BAC-54	41130	Slinger	1
12	BAC-33	40810	Snap ring, internal, BAC-14 mounting frame	2
13	BAC-37	40870	Ball Bearing, sealed, BAC-6 shaft	2
14	BAC-32	40790	Snap ring, external, BAC-6 shaft	2
15	BAC-32-S	40795	Spacer for BAC-6 shaft	1
16	BACH-25	40420	Key, 1/8" x 1/8" x 1/2"	1
17	BAC-6-HYD-SS	40061	Shaft, 5/8" diameter, keyway and tang slot, stainless steel Seal	1
18	S300	40162	support spacer for 300 Series HYD motor, effective 6/00 Hydraulic	1
19	BAC-75-HYD-304N	41343	motor, 11 GPM (effective ?)	1
20	41875	41875	O-ring, #8 SAE fitting	1
21	41445	41445	O-ring, #10 SAE fitting	1
22	BAC-80-8SAE	41455	Body, restrictor orifice, #8SAE x 1/2" NPT	1
23	41448	41448	O-ring, orifice insert	1
24	BAC-79-8	41447	Orifice insert, restrictor insert, 0.125	1
25	41442	41442	Reverse check assembly, #10 SAE x 1/2" NPT	1
26	LS-304N	41429	Flow limiter (optional)	1
①	RK-FMC-150 RK-	52710	Repair kit for FMC-150 series pump	-
②	FMCSC-150	52711	Repair kit for FMC-150 series pump with silicon carbide	-
#	RK-BAC-75-HYD-300-L	41362	seal Repair kit for 300 series motor	-

How to order:
Specify Mfr Part Number
Example: 40160

Continued on next Page

Hydraulic-Driven Centrifugal Pumps

FMC-150SP-HYD-206

- **SP Model** is self-priming making it perfect for load and spray applications.
- Provides higher pressure and greater volume for applications with large tanks and longer spray booms
- **The 206 Motor** requires 7 GPM (26.5 LPM) maximum hydraulic fluid input and fits virtually all tractor hydraulic systems

Recommended for:
–Pressure Compensating Closed Center Systems
–Load Sensing Closed Center Systems
–Open Center Systems up to 16 GPM (60.6 LPM) using internal needle valve bypass

*See following page for part's breakdown information.

SC CI PI

1-1/2"	1-1/4"
SUCTION	DISCHARGE

Maximum Flow: 130 GPM (492 LPM)
Maximum Pressure: 120 PSI (8.3 BAR)

ACE PUMPS
150 SERIES
HIGH PERFORMANCE

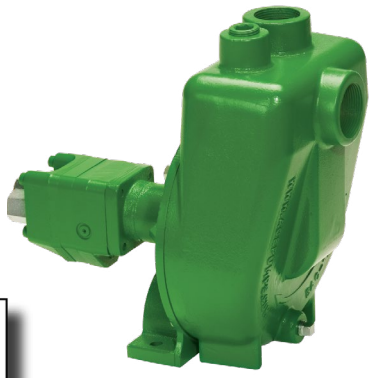

Performance Chart

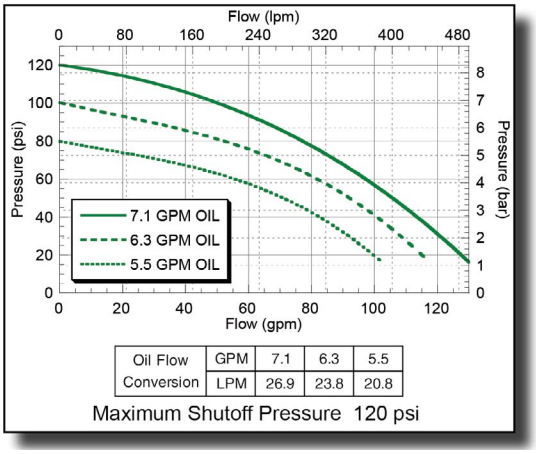

Oil Flow Conversion	GPM	7.1	6.3	5.5
	LPM	26.9	23.8	20.8

Maximum Shutoff Pressure 120 psi

*See following page for part's breakdown information.

Dimensions

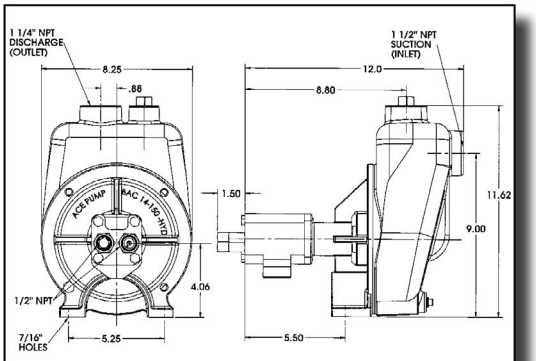

inches	12	11.62	9	8.8	8.25	5.5	5.25	4.09	2.63	2.38
mm	304.8	295.2	228.6	223.5	209.6	139.7	133.4	103.9	66.8	60.5

OIL FLOW	
GPM	LPM
7.1	26.9
6.3	23.8
5.5	20.8

Westward Parts can source many other special order items that are not listed in this catalogue, please visit our website at westwardparts.com or call us directly at 1-888-937-7278. Our team will help you find what you need.
The product images shown are for illustration purposes only and may not be an exact representation of the product.

Continued on next Page

Hydraulic-Driven Centrifugal Pumps

FMC-150SP-HYD-206

ACE PUMPS
150 SERIES HIGH PERFORMANCE

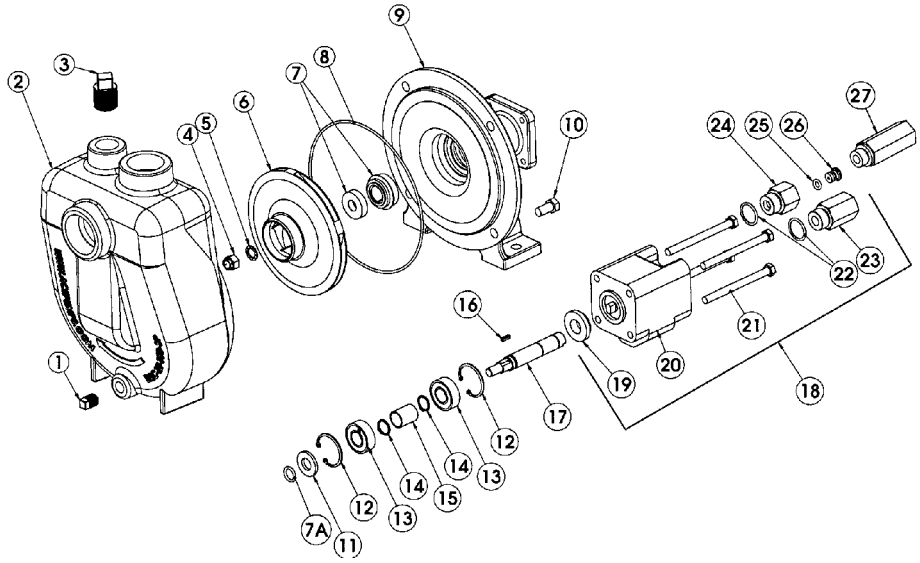

REF. #	MNF PART NO.	EDP #	DESCRIPTION	REQ.
1	20750	20750	Pipe plug, drain, 1/4" NPT	1
2	BAC-12-150-SP	40254	Volute, self-priming, 1-1/2" x 1-1/4"	1
3	41105	41105	Pipe plug, fill, 3/4" NPT	1
4	BAC-23-A	40391	Nut, 3/8" NF, cad plated	1
4	BAC-23-B-SS	40393	Nut, 3/8" NF, stainless steel (standard on -SS models)	1
5①②	BAC-24-HYD-SS	40400	Washer, 3/8" star, stainless steel	1
5	BAC-24-B-SS	42702	Washer, 3/8", stainless steel, vibration proof (standard on -SS models)	1
6	BAC-26-150-P	40446	Impeller, Valox, keyway	1
6	BAC-26-150-CI	40445	Impeller, cast iron, keyway (optional)	1
6	BAC-26-150-PI	40448	Impeller, polypropylene, keyway (optional)	1
7①	BAC-7V	40151	Seal, carbon/ceramic/Viton (includes 40160 O-ring)	1
7②	BAC-7SC	40152	Seal, silicon carbide/Viton (includes 40160 O-ring) (optional)	1
7A①②	40160	40160	O-ring, shaft seal	1
8①②	BAC-4-150	40015	O-ring, body seal	1
9	BAC-14-150-HYD	40305	Mounting frame (for 200 Series hydraulic motor)	1
10	40950	40950	Cap screw, 3/8" NC x 3/4" hex head	4
10	40930	40930	Cap screw, 3/8" NC x 3/4" hex head, stainless steel (optional)	4
11	BAC-54	41130	Slinger	1
12	BAC-33	40810	Snap ring, internal, BAC-14 mounting frame	2
13	BAC-37	40870	Ball Bearing, sealed, BAC-6 shaft	2
14	BAC-32	40790	Snap ring, external, BAC-6 shaft	2
15	BAC-32-S	40795	Spacer for BAC-6 shaft	1
16	BACH-25	40420	Key, 1/8" x 1/8" x 1/2"	1
17	BAC-6-HYD-SS	40061	Shaft, 5/8" diameter, keyway and tang slot, stainless steel	1
18	BAC-75-HYD-206	41372	Hydraulic motor, 7 GPM (includes parts 19 - 26)	1
19	S200	40161	Seal support spacer for 200 Series HYD motor	1
20	BAC-75-HYD-206N	41397	Hydraulic motor, 7 GPM (motor only - no external fittings)	1
21	41255	41255	Cap screw, 5/16" N. C. x 3-3/4" socket head (for 206N motor)	4
22	41875	41875	O-ring, #8 SAE fitting	2
23	BAC-78-8SAE	41441	Reverse check assembly, #8 SAE male x 1/2" NPT female	1
24	BAC-80-8SAE	41455	Body, restrictor orifice, #8 SAE male x 1/2" NPT female	1
25	41448	41448	O-ring, orifice insert	1
26	BAC-79-7	41456	Orifice, restrictor insert, .109 (206N)	1
27	LS-206N	41418	Flow limiting valve (206N), #8 SAE male x 1/2" NPT female	1
①	RK-FMC-150	52710	Repair kit for FMC-150 series pump	-
②	RK-FMCSC-150	52711	Repair kit for FMC-150 series with silicon carbide shaft seal	-
#	RK-BAC-75-HYD-L	41374	Repair kit for 200 Series motor with high pressure lip seal	-

How to order:
Specify Mfr Part Number
Example: 20750

Hydraulic-Driven Centrifugal Pumps

FMC-200-HYD-210
FMC-200-HYD-304
FMC-200SS-HYD-304
FMC-200-HYD-310

SC CI SI

2"	1-1/2"
SUCTION	DISCHARGE

Maximum Flow: 200 GPM (757 LPM)
Maximum Pressure: 120 PSI (8.3 BAR),
80 PSI (5.5 BAR) for 210

ACE PUMPS
200 SERIES HIGH FLOW

- Ideal for spraying, large tank agitation, liquid transfer, and spray transfer combinations.
- **200SS Model** has 316 stainless steel wet end including impeller (SI), volute, and seal plate.
- **The 210 Motor** requires 10 GPM (37.9 LPM) maximum hydraulic fluid input.

Recommended for:
–Pressure Compensating Closed Center Systems
–Load Sensing Closed Center Systems
– Open Center Systems up to 17 GPM (64.4 LPM) using internal needle valve bypass

- **The 304 Motor** requires 13 GPM (51.1 LPM) maximum hydraulic fluid input.

Recommended for:
–Pressure Compensating Closed Center Systems
–Load Sensing Closed Center Systems
–Open Center Systems up to 20 GPM (75.7 LPM) using internal needle valve bypass

- **The 310 Motor** requires 25.7 GPM (97.3 LPM) maximum hydraulic fluid input.

Recommended for:
–Large Open Center Systems up to 34.7 GPM (131.4 LPM) using internal needle valve bypass

Performance Chart

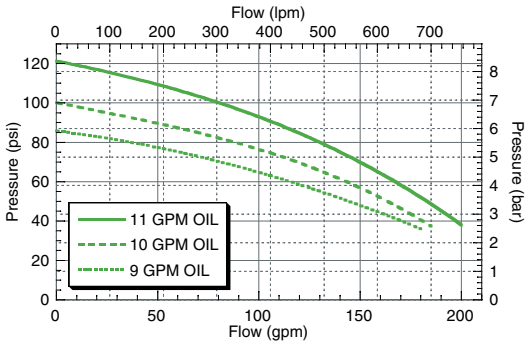

*See following page for part's breakdown information.

Dimensions

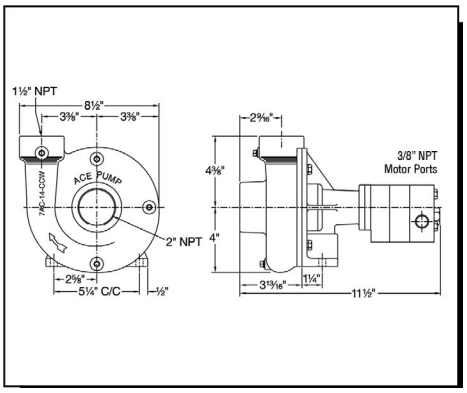

OIL FLOW	
GPM	LPM
11	41.6
10	37.9
9	34.1

Westward Parts can source many other special order items that are not listed in this catalogue, please visit our website at westwardparts.com or call us directly at 1-888-937-7278. Our team will help you find what you need.
The product images shown are for illustration purposes only and may not be an exact representation of the product.

Continued on next Page

Hydraulic-Driven Centrifugal Pumps

FMC-200-HYD-210

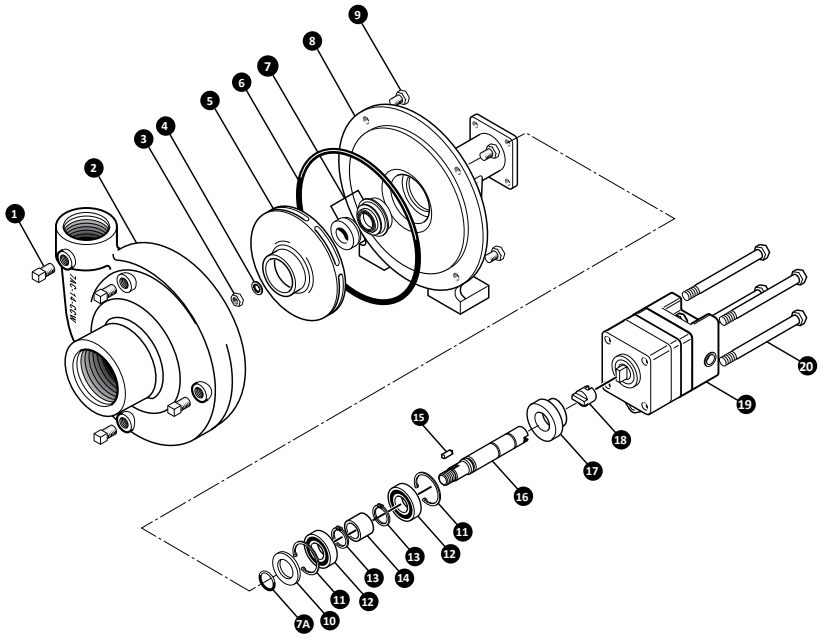

REF. #	MNF PART NO.	EDP #	DESCRIPTION	REQ.
1	BAC-53	4 1110	Pipe plug	4
1	41120	4 1120	Pipe plug, stainless steel (optional)	4
2	7AC-14-CCW	4 1526	Volute, 2” x 1-1/2”	1
3	BAC-23-A	4 0391	Nut, 3/8” NF, cad plated	1
4	BAC-24-HYD-SS	40400	Washer, 3/8” star, stainless steel	1
5	BAC-26-200-CI	40433	Impeller,with extended keyway, cast iron (serial E-9 and up)	1
5	BAC-26-200-P	40434	Impeller, with extended keyway, Valox plastic (available 12/99)	1
5	BAC-26-HYD-200-CI	41525	Impeller, cast iron, keyway (obsolete 6/1/99)	1
*6	BAC-4	4 0010	Gasket, 4 hole	1
*6	BAC-4A	4 0005	O-ring, body seal, effective April 1996	1
*7	BAC-7V	4 0151	Seal, mechanical, Viton (includes 40160 O-Ring)	1
7	BAC-7SC	4 0152	Seal, mechanical, silicon carbide (includes 40160 O-Ring) (optional)	1
7A	40160	40160	O-ring, shaft seal	1
8	BAC-14-HYD	40300	Mounting frame	1
9	40950	40950	Cap screw, 3/8” NC x 3/4” hex head	4
9	40930	40930	Cap screw, 3/8” NC x 3/4” hex head, stainless steel (optional)	4
10	BAC-54	4 1130	Slinger	1
11	BAC-33	4 0810	Snap ring, internal, BAC-14 mounting frame	2
12	BAC-37	4 0870	Ball Bearing, sealed, BAC-6 shaft	2
13	BAC-32	4 0790	Snap ring, external, BAC-6 shaft	2
14	BAC-32-S	40795	Spacer for BAC-6 shaft	1
15	BAC-25	40425	Key, 1/8” x 1/8” x 13/16”, extended keyway (serial E-9 and up)	1
15	BACH-25	40420	Key, 1/8” x 1/8” x 1/2”(obsolete 6/99)	1
16	BAC-6-HYD-200-SS	40063	Shaft, extended keyway, tang slot, stainless steel (serial E-9 and up)	1
16	BAC-6-HYD-SS	4 0061	Shaft, 5/8” dia., keyway, tang slot, stainless steel (obsolete 6/99)	1
17	S200	4 0161	Seal support spacer for 200 Series HYD motor, effective 6/00	1
18	BAC-76-HYD	4 1380	Coupling for hydraulic motor	1
19	BAC-75-HYD-210	4 1375	Hydraulic motor, 8 GPM	1
20	41257	41257	Cap screw, 5/16” N. C. x 4” hex head, motor to pump	4
#	RK-FMC	52700	Repair kit for FMC series pump	-
#	RK-BAC-75-HYD	41371	Repair kit for 200 Series hydraulic motor	-
#	RK-BAC-75-HYD-L	41362	Repair kit for 200 Series -L hydraulic motor (effective 10/1/99)	-

* Items included in pump repair kit.

How to order:
Specify Mfr Part Number
Example: 40160

Continued on next Page

Westward has the part!
YouTube
1-888-937-7278

Hydraulic-Driven Centrifugal Pumps

FMC-200-HYD-304

ACE PUMPS

200 SERIES HIGH FLOW

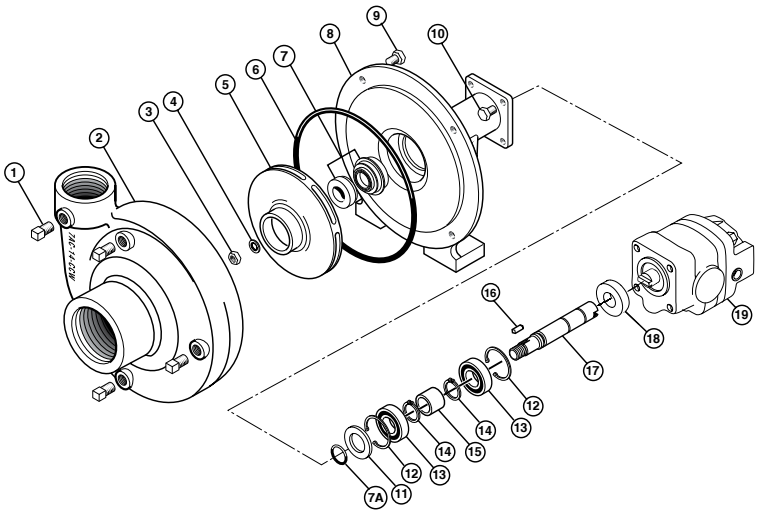

REF #	MNF PART NO.	EDP #	DESCRIPTION	REQ.
1	BAC-53	41110	Pipe plug	4
1	41120	41120	Pipe plug, stainless steel (optional)	4
2	7AC-14-CCW	41526	Volute, 2” x 1-1/2”	1
3	BAC-23-A	40391	Nut, 3/8” NF, cad plated	1
4	BAC-24-HYD-SS	40400	Washer, 3/8” star, stainless steel	1
5	BAC-26-200-CI	40433	Impeller, with extended keyway, cast iron (optional)	1
5	BAC-26-200-P	40434	Impeller, with extended keyway, thermoplastic	1
6①	BAC-4A	40005	O-ring, body seal	1
7①	BAC-7V	40151	Seal, carbon/ceramic/Viton (includes 40160 “O” Ring)	1
7②	BAC-7SC	40152	Seal, silicon carbide (includes 40160 “O” Ring) (optional)	1
7A	40160	40160	O-ring, shaft seal	1
8	BAC-14-HYD-300A	40314	Mounting frame (for -300A series hydraulic motor)	1
9	40950	40950	Cap screw, 3/8” NC x 3/4” hex head	4
9	40930	40930	Cap screw, 3/8” NC x 3/4” hex head, stainless steel (optional)	4
10	41330	41330	Cap screw, 5/16” N. C. x 3/4” hex head, motor to pump	4
11	BAC-54	41130	Slinger	1
12	BAC-33	40810	Snap ring, internal, BAC-14 mounting frame	2
13	BAC-37	40870	Ball Bearing, sealed, BAC-6 shaft	2
14	BAC-32	40790	Snap ring, external, BAC-6 shaft	2
15	BAC-32-S	40795	Spacer for BAC-6 shaft	1
16	BAC-25	40425	Key, 1/8” x 1/8” x 13/16”, extended keyway	1
17	BAC-6-HYD-200-SS	40063	Shaft, extended keyway, tang, stainless steel	1
18	S300	40162	Seal support spacer for 300 Series HYD motor, effective 6/00	1
19	BAC-75-HYD-304A	41388	Hydraulic motor, 11 GPM, 1/2" NPT ports	1
19	BAC-75-HYD-304A-12SAE	41426	Hydraulic motor, 11 GPM, #12 SAE end ports (optional)	1
①	RK-FMC	52700	Repair kit for FMC series pump	-
②	RK-FMCSC	52706	Repair kit for FMC series pump with silicon carbide shaft seal	-
#	RK-BAC-75-HYD-300-L	41362	Repair kit for 300 Series -L motor	-

How to order:
Specify Mfr Part Number
Example: BAC-33

Westward Parts can source many other special order items that are not listed in this catalogue, please visit our website at westwardparts.com or call us directly at 1-888-937-7278. Our team will help you find what you need.
The product images shown are for illustration purposes only and may not be an exact representation of the product.

Continued on next Page

Hydraulic-Driven Centrifugal Pumps

FMC-200SS-HYD-304

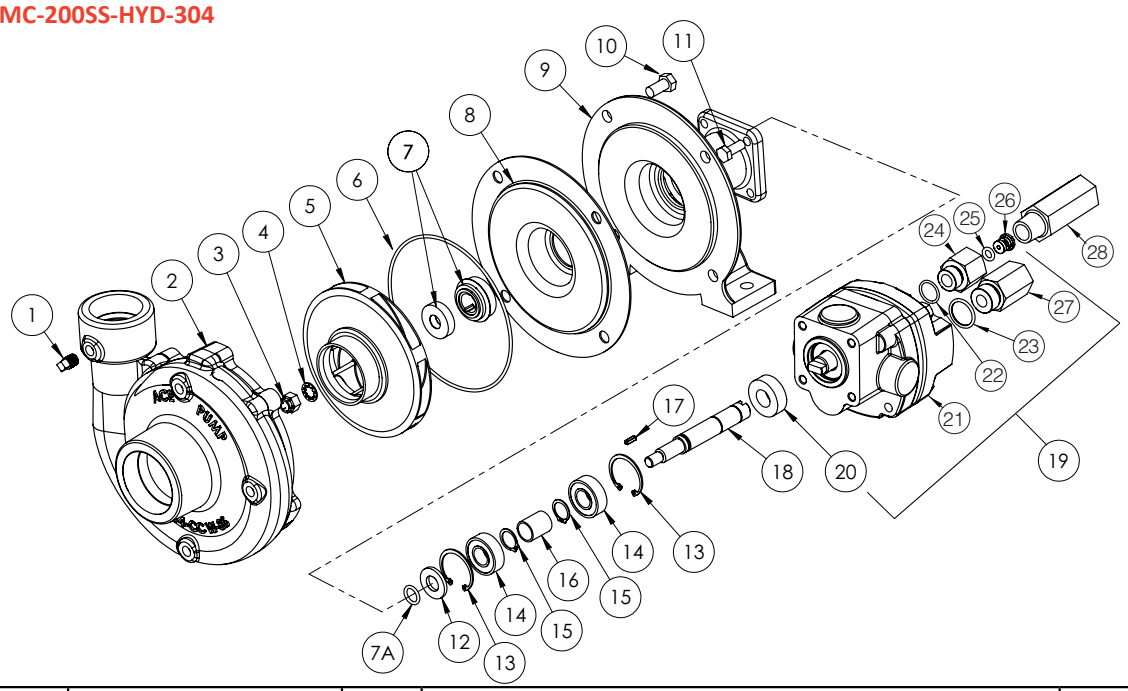

REF. #	MNF PART NO.	EDP #	DESCRIPTION	REQ.
1	41120	41120	Pipe plug, stainless steel	4
2	7AC-14-CCW-SS	41531	Volute, 2” x 1-1/2”, stainless steel	1
3	BAC-23-B-SS	40393	Nut, 3/8” NF, stainless steel	1
4	BAC-24-B-SS	42702	Washer, 3/8”, stainless steel, self-locking	1
5	BAC-26-200-SS	40436	Impeller,with extended keyway, stainless steel	1
5	BAC-26-200-P	40434	Impeller,with extended keyway, thermoplastic (optional)	1
6①②	BAC-4A	40005	O-ring, body seal	1
7①	BAC-7V	40151	Seal, mechanical, Viton (includes 40160 O-ring)	1
7②	BAC-7SC	40152	Seal, mechanical, silicon carbide (includes 40160 O-ring) (optional)	1
7A①②	40160	40160	O-ring, shaft seal	1
8	BAC-14-LIN	40336	Liner; mounting frame, stainless steel	1
9	BAC-14-HYD-300A-LIN	40337	Mounting frame, -300 (A & N) series hydraulic motor (machined for liner)	1
10	40930	40930	Cap screw, 3/8” NC x 3/4” hex head, stainless steel	4
11	41330	41330	Cap screw, 5/16” N. C. x 3/4” hex head, motor to pump	4
12	BAC-54	41130	Slinger	1
13	BAC-33	40810	Snap ring, internal, BAC-14 mounting frame	2
14	BAC-37	40870	Ball bearing, sealed, BAC-6 shaft	2
15	BAC-32	40790	Snap ring, external, BAC-6 shaft	2
16	BAC-32-S	40795	Spacer for BAC-6 shaft	1
17	BAC-25	40425	Key, 1/8” x 1/8” x 13/16”, extended keyway	1
18	BAC-6-HYD-200-SS	40063	Shaft, extended keyway, tang, stainless steel	1
19	BAC-75-HYD-304	41381	Hydraulic motor, 11 GPM (includes parts 11, 20 thru 27)	1
20	S300	40162	Seal support spacer for 300 Series HYD motor	1
21	BAC-75-HYD-304N	41343	Hydraulic motor, 11 GPM, effective 5/13 (motor only - no external fittings)	1
21	BAC-75-HYD-304A-12SAE	41426	Hydraulic motor, 11 GPM, #12 SAE end ports (optional)	1
22	41875	41875	O-ring, #8 SAE fitting	1
23	41445	41445	O-ring, #10 SAE fitting	1
24	BAC-80-8SAE	41455	Body, restrictor orifice, #8SAE x 1/2” NPT	1
25	41448	41448	O-ring, orifice insert	1
26	BAC-79-8	41447	Orifice insert, restrictor insert, 0.125	1
27	BAC-78-10SAE	41442	Reverse check assembly, #10 SAE x 1/2” NPT	1
28	LS-304N	41429	Flow limiter, #8 SAE X 1/2” NPT (optional)	1
①	RK-FMC	52700	Repair kit for FMC series pump	-
②	RK-FMCSC	52706	Repair kit for FMC series pump with silicon carbide shaft seal	-
#	RK-BAC-75-HYD-300-L	41362	Repair kit for 300 Series -L motor	-

How to order:
Specify Mfr Part Number
Example: 40160

Continued on next Page

Hydraulic-Driven Centrifugal Pumps

FMC-200-HYD-310

ACE PUMPS
200 SERIES HIGH FLOW

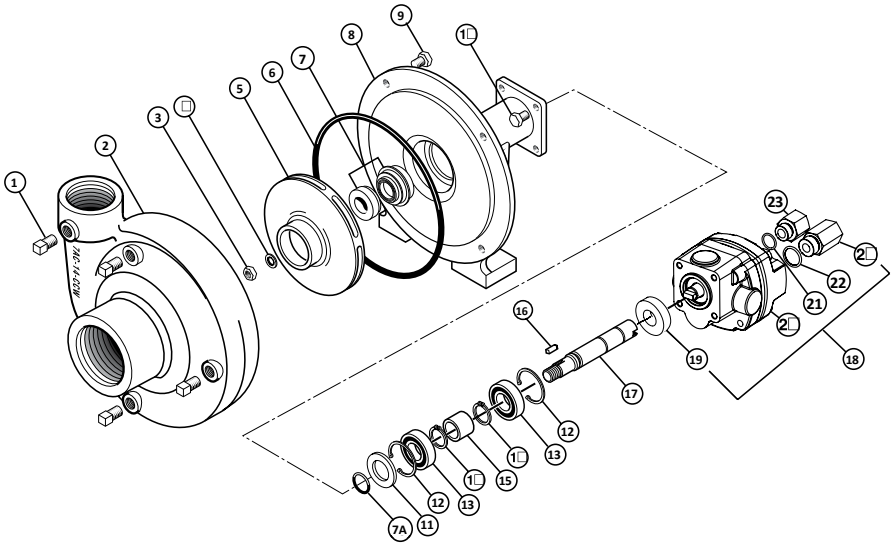

REF. #	MNF PART NO.	EDP #	DESCRIPTION	REQ.
1	BAC-53	41110	Pipe plug	4
1	41120	41120	Pipe plug, stainless steel (optional)	4
2	7AC-14-CCW	41526	Volute, 2” x 1-1/2”	1
3	BAC-23-A	40391	Nut, 3/8” NF, cad plated	1
3	BAC-23-B-SS	40393	Nut, 3/8” NF, SS (optional)	1
4	BAC-24-HYD-SS	40400	Washer, 3/8” star, stainless steel	1
4	BAC-24-B-SS	42702	Washer, 3/8” SS, vibration proof (optional)	1
5	BAC-26-200-P	40434	Impeller, with extended keyway, thermoplastic	1
5	BAC-26-200-CI	40433	Impeller,with extended keyway, cast iron (optional)	1
5	BAC-26-200-SS	40436	Impeller,with extended keyway, 316 stainless steel (optional)	1
6①②	BAC-4A	40005	O-ring, body seal	1
7①	BAC-7V	40151	Seal, mechanical, Viton (includes 40160 O-ring)	1
7②	BAC-7SC	40152	Seal, mechanical, silicon carbide (includes 40160 O-ring) (optional)	1
7A①②	40160	40160	O-ring, shaft seal	1
8	BAC-14-HYD-300A	40314	Mounting frame (for -300A&N series hydraulic motor)	1
9	40950	40950	Cap screw, 3/8” NC x 3/4” hex head	4
9	40930	40930	Cap screw, 3/8” NC x 3/4” hex head, stainless steel (optional)	4
10	41330	41330	Cap screw, 5/16” N. C. x 3/4” hex head, motor to pump	4
11	BAC-54	41130	Slinger	1
12	BAC-33	40810	Snap ring, internal, BAC-14 mounting frame	2
13	BAC-37	40870	Ball Bearing, sealed, BAC-6 shaft	2
14	BAC-32	40790	Snap ring, external, BAC-6 shaft	2
15	BAC-32-S	40795	Spacer for BAC-6 shaft	1
16	BAC-25	40425	Key, 1/8” x 1/8” x 13/16”, extended keyway	1
17	BAC-6-HYD-200-SS	40063	Shaft, extended keyway, tang, stainless steel	1
18	BAC-75-HYD-310	41378	Hydraulic motor, 16 - 25 GPM (includes parts 10, 19 thru 24)	1
19	S300	40162	Seal support spacer for 300 Series HYD motor, effective 6/00	1
20	BAC-75-HYD-310N	41344	Hydraulic motor, 16 - 25 GPM, effective 5/13 (motor only, no external fittings)	1
21	41875	41875	O-ring, #8 SAE fitting	1
22	41445	41445	O-ring, #10 SAE fitting	1
23	BAC-80-8SAE	41455	Body, restrictor orifice, #8SAE x 1/2” NPT	1
24	BAC-78-10SAE	41442	Reverse check assembly, #10 SAE x 1/2” NPT	1
①	RK-FMC	52700	Repair kit for FMC series pump	-
②	RK-FMCSC	52706	Repair kit for FMC series pump with silicon carbide shaft seal	-
#	RK-BAC-75-HYD-300-L	41362	Repair kit for 300 Series -L motor	-

How to order:
Specify Mfr Part Number
Example: 40160

Hydraulic-Driven Centrifugal Pumps

FMC-200F-HYD-304

- Ideal for spraying, large tank agitation, liquid transfer, and spray transfer combinations.
- **F Model** equipped with industry standard flanged connections.
- **The 304 Motor** requires 11 GPM (41.6 LPM) maximum hydraulic fluid input.

Recommended for:
–Pressure Compensating Closed Center Systems.
–Load Sensing Closed Center Systems.
–Open Center Systems up to 20 GPM (75.7 LPM) using internal needle valve bypass.

300 Flange	220 Flange
SUCTION	DISCHARGE

Maximum Flow: 240 GPM (908 LPM)
Maximum Pressure: 120 PSI (8.3 BAR)

ACE PUMPS
200 SERIES HIGH FLOW

Performance Chart

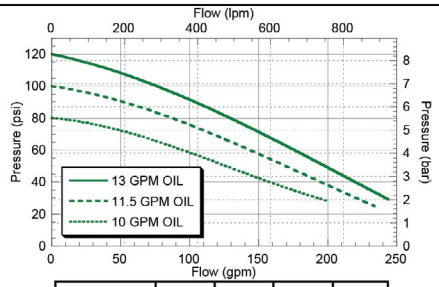

Oil Flow	GPM	13	11.5	10
Conversion	LPM	49.2	43.5	37.8

Maximum Shutoff Pressure 120 psi (8.3 bar)

Dimensions

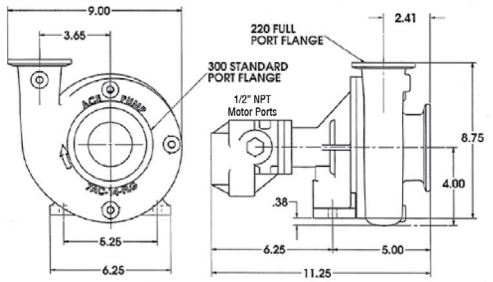

inches	11.25	9.00	8.75	6.25	5.25	5.00	4.00	3.65	2.41
mm	285.8	228.6	222.3	158.8	133.4	127.0	101.6	92.7	61.2

OIL FLOW	
GPM	LPM
13	51.1
11.5	43.5
10	37.9

*See following page for part's breakdown information.

Westward Parts can source many other special order items that are not listed in this catalogue, please visit our website at westwardparts.com or call us directly at 1-888-937-7278. Our team will help you find what you need.
The product images shown are for illustration purposes only and may not be an exact representation of the product.

Continued on next Page

Hydraulic-Driven Centrifugal Pumps

FMC-200F-HYD-304

ACE PUMPS
200 SERIES HIGH FLOW

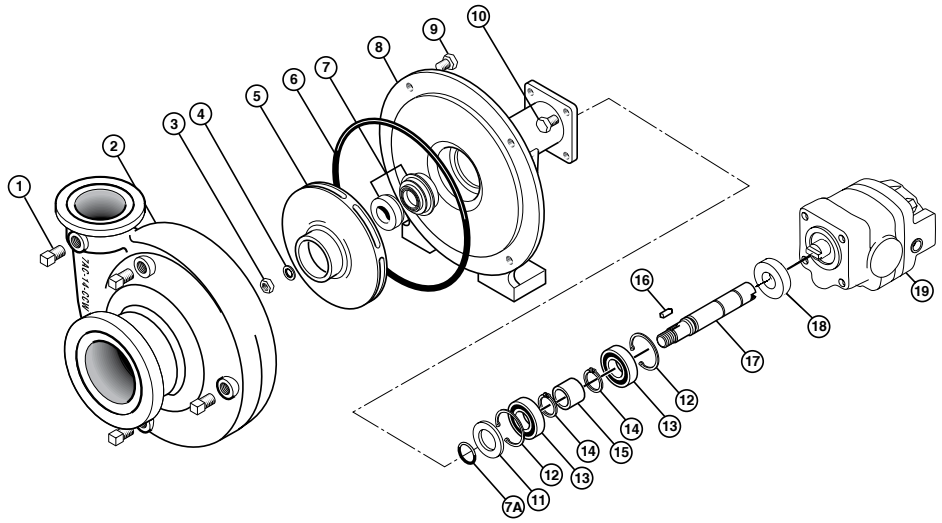

REF. #	MNF PART NO.	EDP #	DESCRIPTION	REQ.
1	BAC-53	41110	Pipe plug	4
1	41120	41120	Pipe plug, stainless steel (optional)	4
2	7AC-14-FLG	41530	Volute, 300 standard flange x 220 full port flange	1
3	BAC-23-A	40391	Nut, 3/8” NF, cad plated	1
4	BAC-24-HYD-SS	40400	Washer, 3/8” star, stainless steel	1
5	BAC-26-200-CI	40433	Impeller, with extended keyway, cast iron (optional)	1
5	BAC-26-200-P	40434	Impeller, with extended keyway, thermoplastic	1
6①	BAC-4A	40005	O-ring, body seal	1
7①	BAC-7V	40151	Seal, carbon/ceramic/Viton (includes 40160 “O” Ring)	1
7②	BAC-7SC	40152	Seal, silicon carbide (includes 40160 “O” Ring) (optional)	1
7A	40160	40160	O-ring, shaft seal	1
8	BAC-14-HYD-300A	40314	Mounting frame (for -300A series hydraulic motor)	1
9	40950	40950	Cap screw, 3/8” NC x 3/4” hex head	4
9	40930	40930	Cap screw, 3/8” NC x 3/4” hex head, stainless steel (optional)	4
10	41330	41330	Cap screw, 5/16” N. C. x 3/4” hex head, motor to pump	4
11	BAC-54	41130	Slinger	1
12	BAC-33	40810	Snap ring, internal, BAC-14 mounting frame	2
13	BAC-37	40870	Ball Bearing, sealed, BAC-6 shaft	2
14	BAC-32	40790	Snap ring, external, BAC-6 shaft	2
15	BAC-32-S	40795	Spacer for BAC-6 shaft	1
16	BAC-25	40425	Key, 1/8” x 1/8” x 13/16”, extended keyway	1
17	BAC-6-HYD-200-SS	40063	Shaft, extended keyway, tang, stainless steel	1
18	S300	40162	Seal support spacer for 300 Series HYD motor	1
19	BAC-75-HYD-304A	41388	Hydraulic motor, 11 GPM, 1/2" NPT ports	1
19	BAC-75-HYD-304A-12SAE	41426	Hydraulic motor, 11 GPM, #12 SAE end ports (optional)	1
①	RK-FMC	52700	Repair kit for FMC series pump	-
②	RK-FMCSC	52706	Repair kit for FMC series pump with silicon carbide shaft seal	-
#	RK-BAC-75-HYD-300-L	41362	Repair kit for 300 Series -L motor	-

How to order:
Specify Mfr Part Number
Example: 40160

Westward Parts can source many other special order items that are not listed in this catalogue, please visit our website at westwardparts.com or call us directly at 1-888-937-7278. Our team will help you find what you need.
The product images shown are for illustration purposes only and may not be an exact representation of the product.

Hydraulic-Driven Centrifugal Pumps

FMCSC-155FS-HYD-206
FMCSC-155FS-HYD-304

- Severe duty silicon-carbide shaft seal (SC) standard with o-ring seat for improved survivability
- 316 stainless steel housings with NPT ports and industry standard flanged connections
- Larger bearings for extended life
- Provides higher pressure and greater volume for applications with large tanks and longer spray booms
- **The 206 motor** requires 7 GPM (26.5 LPM) maximum hydraulic fluid input and fits virtually all tractor hydraulic systems

Recommended for:
– Pressure Compensating Closed Center Systems
– Load Sensing Closed Center Systems
– Open Center Systems up to 16 GPM (60.6 LPM) using internal needle valve bypass

- **The 304 motor** requires 11 GPM (41.6 LPM) maximum hydraulic fluid input

Recommended for:
– Pressure Compensating Closed Center Systems
– Load Sensing Closed Center Systems
– Open Center Systems up to 20 GPM (75.7 LPM) using internal needle valve bypass

CI PI

1-1/2" 220 Flange	1-1/4" 200 Flange
SUCTION	DISCHARGE

Maximum Flow: 145 GPM (549 LPM)
Maximum Pressure: 120 PSI (8.3 BAR)

ACE PUMPS

155 SERIES HIGH PERFORMANCE

Performance Chart

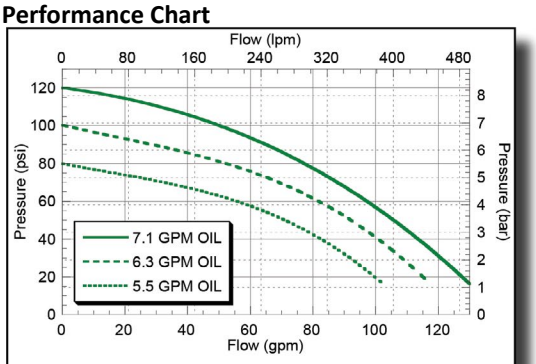

Oil Flow Conversion	GPM	7.1	6.3	5.5
	LPM	26.9	23.8	20.8

Maximum Shutoff Pressure 120 psi

Dimensions

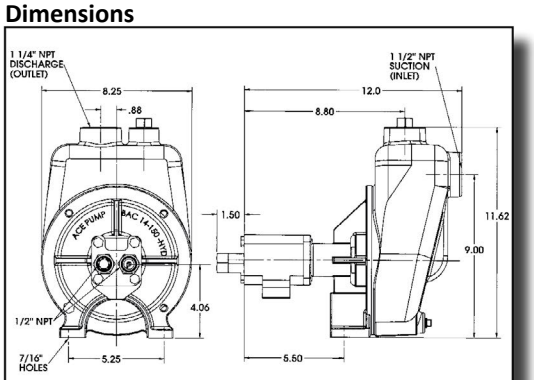

inches	12	11.62	9	8.8	8.25	5.5	5.25	4.09	2.63	2.38
mm	304.8	295.2	228.6	223.5	209.6	139.7	133.4	103.9	66.8	60.5

OIL FLOW	
GPM	LPM
6.5	24.6
5.8	21.9
5	18.9

*See following page for part's breakdown information.

Westward Parts can source many other special order items that are not listed in this catalogue, please visit our website at westwardparts.com or call us directly at 1-888-937-7278. Our team will help you find what you need.
The product images shown are for illustration purposes only and may not be an exact representation of the product.

Continued on next Page

Hydraulic-Driven Centrifugal Pumps

FMCSC-155FS-HYD-206

ACE PUMPS

155 SERIES
HIGH PERFORMANCE

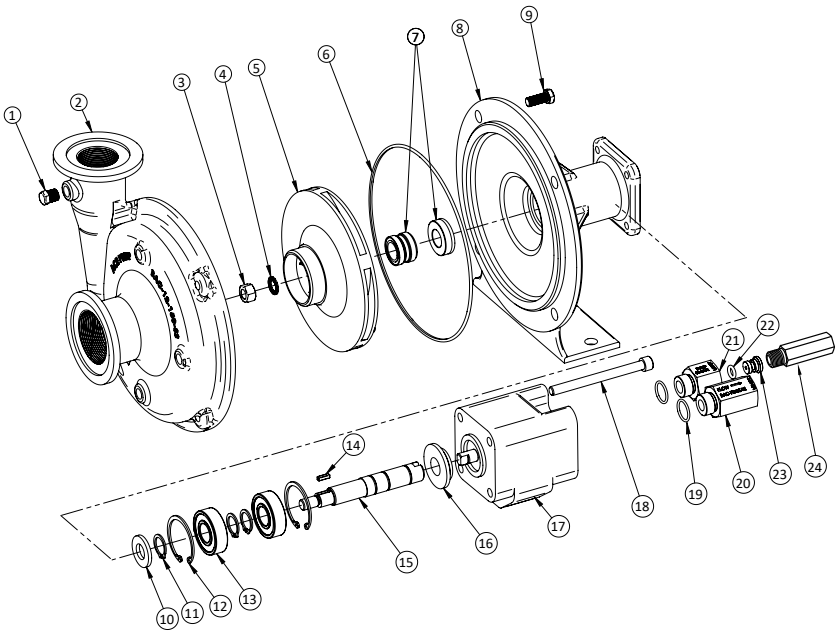

REF. #	MNF PART NO.	EDP #	DESCRIPTION	REQ.
1	41120	41120	Pipe plug, stainless steel	4
2	BAC-12-150-SS	40249	Volute, 316 stainless steel , NPT & flanged	1
3	BAC-23-B-SS	40393	Nut, 3/8” NF, stainless steel	1
4	BAC-24-B-SS	42702	Washer, 3/8”, stainless steel, vibration proof	1
5	BAC-26-150-P	40446	Impeller, Valox, keyway	1
5	BAC-26-150-CI	40445	Impeller, cast iron, keyway (optional)	1
5	BAC-26-150-PI	40448	Impeller, polypropylene, keyway (optional)	1
6①	BAC-4-150	40015	O-ring, body seal	1
7①	BAC-7SC-205V	40149	Seal, silicon carbide/Viton	1
8	BAC-14-155-HYD-SS	40348	Mounting frame, 316 stainless steel	1
9	40930	40930	Cap screw, 3/8” NC x 3/4” hex head, stainless steel	4
10	BAC-54	41130	Slinger	1
11	BACH-32-HD	40385	Snap ring, external, shaft	3
12	BACH-33	40820	Snap ring, internal, mounting frame	2
13	40880	40880	Ball bearing, sealed	2
14	BACH-25	40420	Key, 1/8” x 1/8” x 1/2”	1
15	BAC-6-155-HYD-SS	40072	Shaft, 5/8” diameter, keyway and tang slot, stainless steel	1
16	S255	40177	Seal support spacer for 200 Series HYD motor	1
17	BAC-75-HYD-206N5	41329	Hydraulic motor, 7 GPM (motor only - no external fittings)	1
18	41255	41255	Cap screw, 5/16” N. C. x 3-3/4” socket head (for 206N motor)	4
19	41875	41875	O-ring, #8 SAE fitting	2
20	BAC-78-8SAE	41441	Reverse check valve, #8 SAE male x 1/2” NPT female	1
21	BAC-80-8SAE	41455	Adapter, restrictor body, #8 SAE male x 1/2” NPT female	1
22	41448	41448	O-ring, orifice insert	1
23	BAC-79-7	41456	Orifice, restrictor insert, .109 (206N)	1
24	LS-206N	41418	Flow limiting valve (206N), #8 SAE male x 1/2” NPT female, optional	-
①	RK-FMCSC-155	52713	Repair kit for FMC-155 series with silicon carbide shaft seal	-
#	RK-BAC-75-HYD-L	41374	Repair kit for 200 Series motor	-

How to order:
Specify Mfr Part Number
Example: 40160

Westward Parts can source many other special order items that are not listed in this catalogue, please visit our website at westwardparts.com or call us directly at 1-888-937-7278. Our team will help you find what you need.
The product images shown are for illustration purposes only and may not be an exact representation of the product.

Continued on next Page

Hydraulic-Driven Centrifugal Pumps

FMCSC-155FS-HYD-304

ACE PUMPS

155 SERIES
HIGH PERFORMANCE

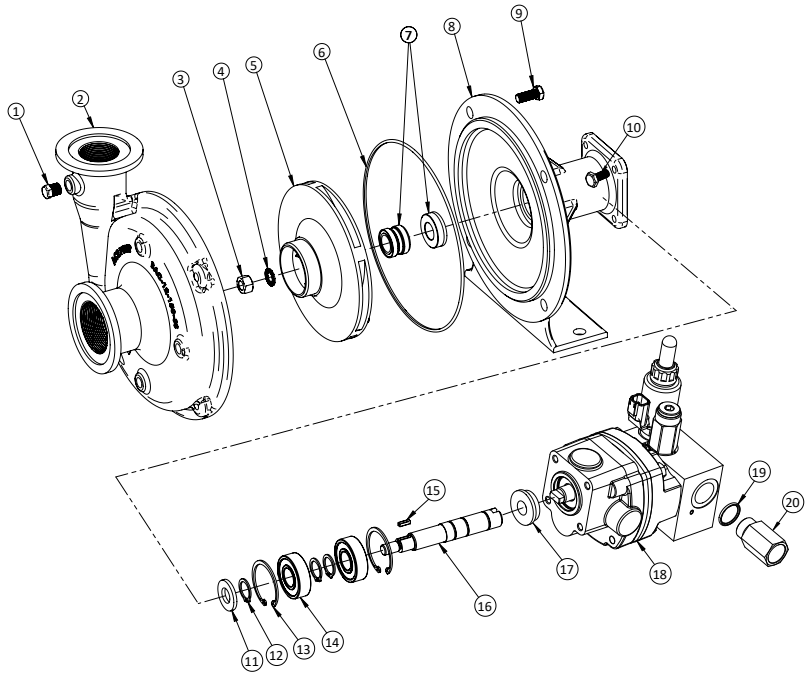

REF. #	MNF PART NO.	EDP #	DESCRIPTION	REQ.
1	41120	41120	Pipe plug, stainless steel	4
2	BAC-12-150-SS	40249	Volute, 316 stainless steel , NPT & flanged	1
3	BAC-23-B-SS	40393	Nut, 3/8” NF, stainless steel	1
4	BAC-24-B-SS	42702	Washer, 3/8”, stainless steel, vibration proof	1
5	BAC-26-150-P	40446	Impeller, thermoplastic, keyway	1
5	BAC-26-150-CI	40445	Impeller, cast iron, keyway (optional)	1
5	BAC-26-150-PI	40448	Impeller, polypropylene, keyway (optional)	1
6①	BAC-4-150	40015	O-ring, body seal	1
7①	BAC-7SC-205V	40149	Seal, silicon carbide	1
8	BAC-14-155-HYD-SS	40348	Mounting frame, 316 stainless steel	1
9	40930	40930	Cap screw, 3/8” NC x 3/4” hex head, stainless steel	4
10	41330	41330	Cap screw, 5/16” NC x 3/4” hex head	4
11	BAC-54	41130	Slinger	1
12	BACH-32-HD	40385	Snap ring, external, shaft	3
13	BACH-33	40820	Snap ring, internal, mounting frame	2
14	40880	40880	Ball bearing, sealed	2
15	BACH-25	40420	Key, 1/8” x 1/8” x 1/2”	1
16	BAC-6-155-HYD-SS	40072	Shaft, 5/8” diameter, keyway and tang slot, stainless steel	1
17	S305	40163	Seal support spacer for 305 Series HYD motor	1
18	BAC-75-HYD-304-PWM	41348	Hydraulic motor, 11 GPM, PWM	1
19	41445	41445	O-ring, #10 SAE fitting	1
20	BAC-78-10X10SAE	41467	Reverse check valve, #10 SAE male x #10 SAE female	1
①	RK-FMCSC-155	52713	Repair kit for FMC-155 series with silicon carbide shaft seal	-
#	RK-BAC-75-HYD-300-L	41362	Repair kit for 300 Series motor	-

How to order:
Specify Mfr Part Number
Example: 40160

Westward Parts can source many other special order items that are not listed in this catalogue, please visit our website at westwardparts.com or call us directly at 1-888-937-7278. Our team will help you find what you need.
The product images shown are for illustration purposes only and may not be an exact representation of the product.

Hydraulic-Driven Centrifugal Pumps

FMCSC-205F-HYD-304
FMCSC-205FS-HYD-304

- Severe duty silicon-carbide shaft seal (SC) standard with o-ring seat for improved survivability.
- F model equipped with industry standard full-port flanged connections for high-flow applications.
- FS model has a 316 stainless steel wet end including impeller (SI), volute, and frame with industry standard full-port flanged connections for maximum performance.
- Larger bearings for extended life.
- Ideal for spraying, large tank agitation, liquid transfer, and spray - transfer combinations.
- **The 304 motor** requires 13 GPM (51.1 LPM) maximum hydraulic fluid input

Recommended for:
– Pressure Compensating Closed Center Systems
– Load Sensing Closed Center Systems
–Open Center Systems up to 20 GPM (75.7 LPM) using internal needle valve bypass

CI SI

300 Flange	220 Flange
SUCTION	DISCHARGE

Maximum Flow: 240 GPM (908 LPM)
Maximum Pressure: 120 PSI (8.3 BAR)

ACE PUMPS
205 SERIES HIGH FLOW

Performance Chart

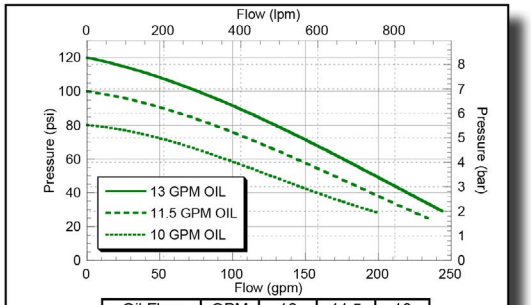

Oil Flow	GPM	13	11.5	10
Conversion	LPM	49.2	43.5	37.8

Maximum Shutoff Pressure 120 psi (8.3 bar)

*See following page for part's breakdown information.

Dimensions

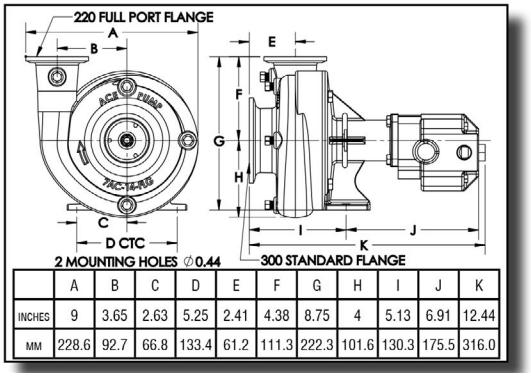

	A	B	C	D	E	F	G	H	I	J	K
INCHES	9	3.65	2.63	5.25	2.41	4.38	8.75	4	5.13	6.91	12.44
MM	228.6	92.7	66.8	133.4	61.2	111.3	222.3	101.6	130.3	175.5	316.0

OIL FLOW	
GPM	LPM
13	51.1
11.5	43.5
10	37.9

Westward Parts can source many other special order items that are not listed in this catalogue, please visit our website at westwardparts.com or call us directly at 1-888-937-7278. Our team will help you find what you need.
The product images shown are for illustration purposes only and may not be an exact representation of the product.

Continued on next Page

Hydraulic-Driven Centrifugal Pumps

FMCSC-205F-HYD-304
FMCSC-205FS-HYD-304

ACE PUMPS

205 SERIES HIGH FLOW

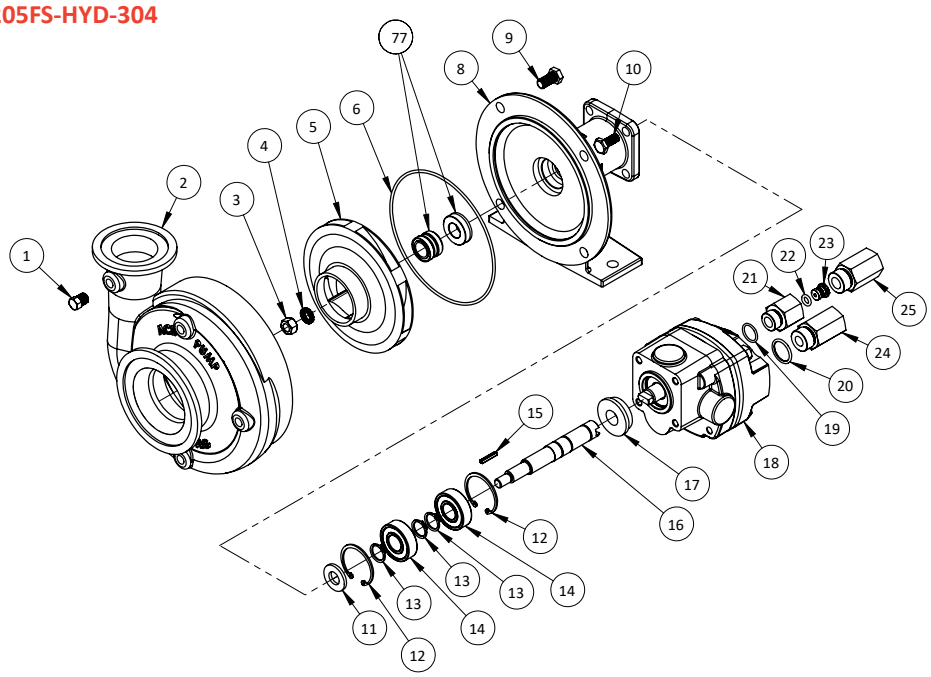

REF. #	MNF PART NO.	EDP #	DESCRIPTION	REQ.
1	BAC-53	41110	Pipe plug	4
1	41120	41120	Pipe plug, stainless steel (-FS model)	4
2	7AC-14-FLG	41530	Volute, 300 standard flange x 220 full port flange, cast iron	1
2	7AC-14-FLG-SS	41532	Volute, 300 flange x 220 flange, 316 stainless steel (-FS model)	1
3	BAC-23-B-SS	40393	Nut, 3/8" NF, stainless steel	1
4	BAC-24-B-SS	42702	Washer, 3/8", stainless steel, self-locking	1
5	BAC-26-200-P	40434	Impeller, thermoplastic	1
5	BAC-26-200-CI	40433	Impeller, cast iron (optional)	1
5	BAC-26-200-SS	40436	Impeller, 316 stainless steel (-FS model) (optional)	1
6①	BAC-4A	40005	O-ring, body seal	1
7①	BAC-7SC-205V	40149	Seal, silicon carbide	1
8	BAC-14-205-HYD	40338	Mounting frame for 205 pump	1
8	BAC-14-205-HYD-SS	40346	Mounting frame for 205 pump, 316 stainless steel (-FS model)	1
9	40950	40950	Cap screw, 3/8" NC x 3/4" hex head	4
9	40930	40930	Cap screw, 3/8" NC x 3/4" hex head, stainless steel (-FS model)	4
10	41330	41330	Cap screw, 5/16" NC x 3/4" hex head, motor to pump	4
11	BAC-54	41130	Slinger	1
12	BACH-33	40820	Snap ring, internal, BAC-14-205 mounting frame	2
13	BACH-32-HD	40385	Snap ring, external, BAC-6-205 shaft	3
14	40880	40880	Ball bearing, sealed, BAC-6-205 shaft	2
15	BAC-6-205-HYD-SS	40068	Shaft, extended keyway, tang, stainless steel	1
16	BAC-25	40425	Key, 1/8" x 1/8" x 13/16", extended keyway	1
17	S305	40163	Seal support spacer for 205 series pump	1
18	BAC-75-HYD-304N	41343	Hydraulic motor, 11 GPM, effective 5/13	1
19	41875	41875	O-ring, #8 SAE fitting	1
20	41445	41445	O-ring, #10 SAE fitting	1
21	BAC-80-8SAE	41455	Body, restrictor orifice, #8SAE x 1/2" NPT	1
22	41448	41448	O-ring, orifice insert	1
23	BAC-79-8	41447	Orifice insert, restrictor insert, 0.125	1
24	41442	41442	Reverse check assembly, #10 SAE x 1/2" NPT	1
25	LS-304N	41429	Flow limiter (optional)	1
①	RK-FMCSC-205	52705	Repair kit for FMC-205 pump with silicon carbide shaft seal	-
#	RK-BAC-75-HYD-300-L	41362	Repair kit for 300 Series hydraulic motor	-

How to order:
Specify Mfr Part Number
Example: 41110

Hydraulic-Driven Centrifugal Pumps

General Advantages

Ace's MAX Series pumps were designed from the ground up for today's demanding applications. Each model is engineered for maximum reliability and performance. A durable e-coat finish provides extra corrosion resistance on all surfaces inside and out. The 4000 psi high efficiency pressure plated gear motors provide higher output with less oil flow.
The impellers are designed to develop higher pressure at lower shaft speeds. A splined motor to pump shaft connection strengthens the power train while allowing for easy repair and maintenance. Oversized bearings round out the list of features for long, trouble free life.

SC SI BSP

1-1/2"	1-1/4"
SUCTION	DISCHARGE

Maximum Flow: 140 GPM (530 LPM)
Maximum Pressure: 160 PSI (11 BAR)

ACE PUMPS
650 MAX SERIES

FMC-650-HYD

- Tall Blade Impeller design develops higher pressure at lower RPM
- **The M16 Motor** requires 14 GPM (53 LPM) maximum hydraulic fluid input

Recommended for:
– Pressure Compensating Closed Center Systems
– Load Sensing Closed Center Systems
– Open Center Systems up to 14 GPM (53 LPM)
Maximum Flow: 170 GPM (643.5 LPM)
Maximum Pressure: 160 PSI (11 BAR)

Performance Chart

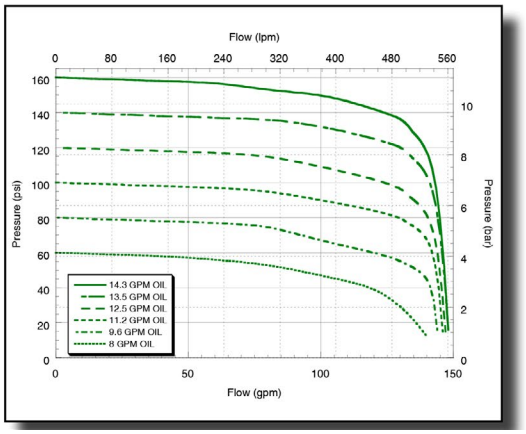

Dimensions

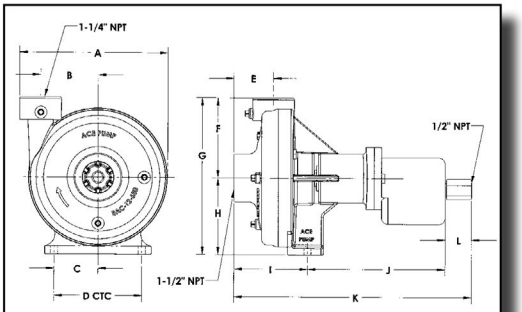

	A	B	C	D	E	F	G	H	I	J	K	L
in.	8-7/8	3-1/2	2-5/8	5-1/4	2-3/8	4-3/4	9-1/2	4-3/4	4-1/2	8-7/8	14-7/8	1-1/2
mm	225	89	67	133	60	121	241	121	114	225	378	38

OIL FLOW	
GPM	LPM
14.3	54.1
13.5	51.1
12.5	47.3
11.2	42.4
9.6	36.3
8	30.3

*See following page for part's breakdown information.

Westward Parts can source many other special order items that are not listed in this catalogue, please visit our website at westwardparts.com or call us directly at 1-888-937-7278. Our team will help you find what you need.
The product images shown are for illustration purposes only and may not be an exact representation of the product.

Continued on next Page

Hydraulic-Driven Centrifugal Pumps

FMC-650-HYD

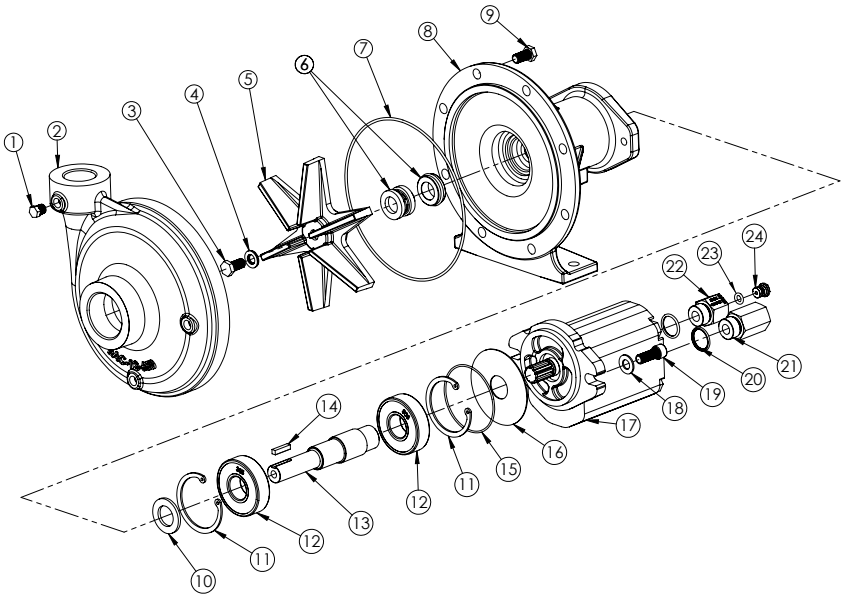

REF. #	MNF PART NO.	EDP #	DESCRIPTION	REQ.
1	BAC-53	41110	Pipe plug, 1/8” NPT, hex head	3
1	41120	41120	Pipe plug, 1/8” NPT, hex head, stainless steel (optional)	3
2	BAC-12-650	30163	Volute, 1-1/2” NPT x 1-1/4” NPT, cast iron, e-coated	1
2	BAC-12-650-BSP	30153	Volute, 1-1/2” BSPP x 1-1/4” BSPP, cast iron, e-coated(optional)	1
3	40930	40930	Cap screw, 3/8” NC x 3/4” hex head, stainless steel	1
4①②	30029	30029	Washer, 3/8” O.D., sealing, stainless steel	1
5	BAC-26-650	30169	Impeller, cast iron, e-coated	1
5	BAC-26-650-SS	30191	Impeller, stainless steel (optional)	1
6①	BAC-7-650	40145	Seal, carbon/ceramic/Viton®, 3/4”	1
6②	BAC-7SC-650	40146	Seal, silicon carbide/Viton®, 3/4”(optional)	1
6	BAC-7-650B	40144	Seal, carbon/ceramic/Buna N, 3/4” (for aqua ammonia)	1
7①②	BAC-4-150	40015	O-ring, volute seal	1
8	BAC-14-650-HYD	40325	Mounting frame, cast iron, e-coated	1
9	40950	40950	Cap screw, 3/8” NC x 3/4” hex head	8
9	40930	40930	Cap screw, 3/8” NC x 3/4” hex head, stainless steel (optional)	8
10	BAC-54-650	41132	Slinger, 1.5” OD x 7/8” ID	1
11	41943	41943	Snap ring, internal, mounting frame	2
12	40875	40875	Bearing, FMC-650 models	2
13	BAC-6-650-HYD-SS	40051	Shaft, 1.13” dia., 11T female spline, stainless steel	1
14	41085	41085	Key, .188 x .188 x .875, FMC-650 models	1
15	43419	43419	O-ring, flange, M Series (effective 6/15)	1
16	43414	43414	Pad, absorbent, M Series (effective 6/15)	1
17	BAC-75-HYD-M16	41359	Motor, hydraulic, pressure plated gear, 14.5 gpm	1
17	BAC-75-HYD-M16-CD	41358	Motor, pressure plated gear, 14.5 gpm, case drain (optional)	1
18	42701	42701	Washer, 3/8”	2
19	41907	41907	Cap screw, 3/8” NC x 1”, socket head, stainless steel	2
20	41445	41445	O-ring, #10 SAE fitting	2
21	BAC-78-10SAE	41442	Reverse check, #10 SAE male x 1/2” NPT female	1
22	BAC-80-10SAE	41446	Body, adapter/restrictor, #10 SAE male x 1/2” NPT female	1
23	41448	41448	O-ring, restrictor insert	1
24	BAC-79-8	41447	Restrictor orifice insert, .125	1
①	RK-FMC-650	52720	Repair kit, carbon/ceramic/Viton® seal, FMC-650 models	--
②	RK-FMCSC-650	52721	Repair kit, silicon carbide/Viton® seal, FMC-650 models	--

How to order:
Specify Mfr Part Number
Example: 41950

Continued on next Page

Hydraulic-Driven Centrifugal Pumps

FMC-650F-HYD
FMC-650FS-HYD

- Tall Blade Impeller design develops higher pressure at lower RPM
- **F Model** equipped with NPT ports and industry standard flanged connections
- **FS Model** has a 316 stainless steel wet end including impeller SI, volute, and seal plate with industry standard full-port flanged connections for maximum performance
- **The M16 Motor** requires 14 GPM (53 LPM) maximum hydraulic fluid input

Recommended for:
– Pressure Compensating Closed Center Systems
– Load Sensing Closed Center Systems
– Open Center Systems up to 14 GPM (53 LPM)
Maximum Flow: 170 GPM (643.5 LPM)
Maximum Pressure: 160 PSI (11 BAR)

SC SI

1-1/2" 220 Flange	1-1/4" 200 Flange
SUCTION	DISCHARGE

Maximum Flow: 170 GPM (643.5 LPM)
Maximum Pressure: 160 PSI (11 BAR)

ACE PUMPS
650 MAX SERIES

Performance Chart

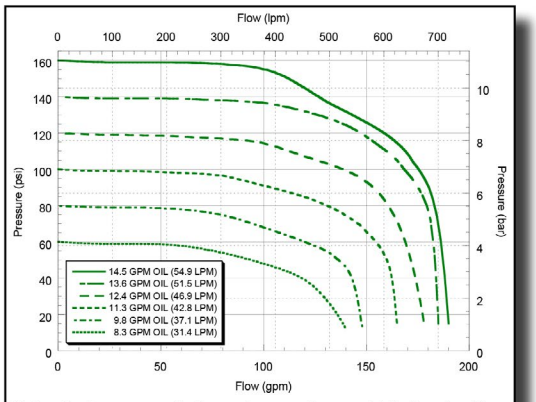

Note: Performance with flanged connections and full size plumbing.

Dimensions

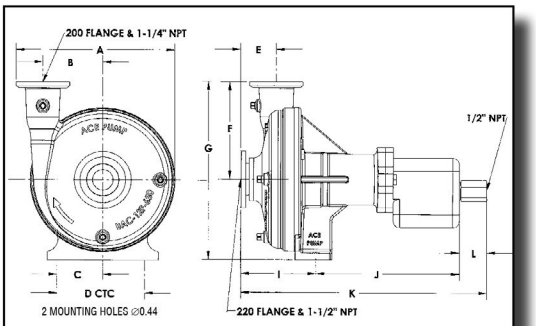

	A	B	C	D	E	F	G	I	J	K	L
INCHES	9.25	3.50	2.63	5.25	2.00	5.62	10.3	4.31	8.82	14.64	1.50
MM	235.0	88.9	66.8	133.3	50.8	142.8	261.6	109.5	224.0	371.9	38.1

OIL FLOW	
GPM	LPM
14.5	54.9
13.6	51.5
12.4	46.9
11.3	42.8
9.8	37.1
8.3	31.4

*See following page for part's breakdown information.

Westward Parts can source many other special order items that are not listed in this catalogue, please visit our website at westwardparts.com or call us directly at 1-888-937-7278. Our team will help you find what you need.
The product images shown are for illustration purposes only and may not be an exact representation of the product.

Continued on next Page

Hydraulic-Driven Centrifugal Pumps

FMC-650F-HYD
FMC-650FS-HYD

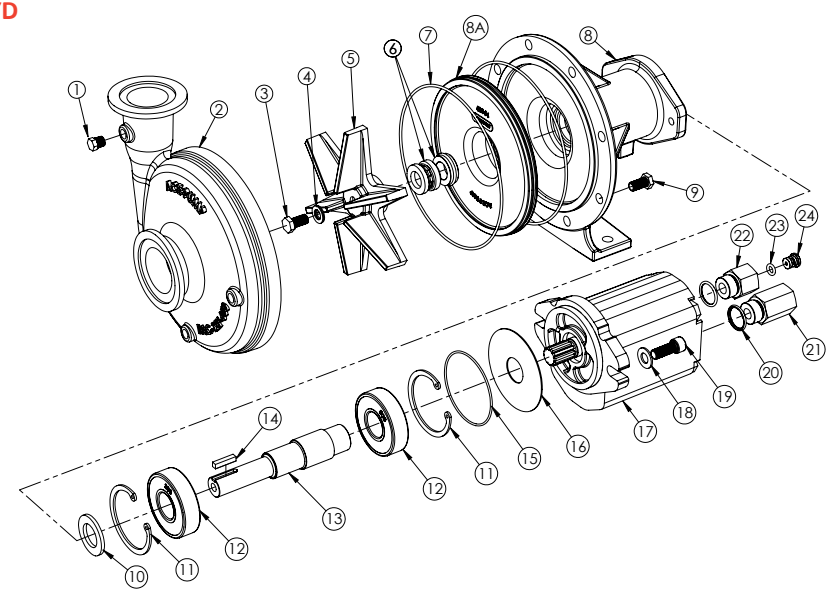

REF. #	MNF PART NO.	EDP #	DESCRIPTION	REQ.
1	BAC-53	41110	Pipe plug, 1/8” NPT, hex head	3
1	41120	41120	Pipe plug, 1/8” NPT, hex head, stainless steel (optional)	3
2	BAC-12-650-FLG	30159	Volute, NPT & 220 flange x NPT & 200 flange (F model)	1
2	BAC-12-650-FLG-SS	30156	Volute, NPT & 220 x NPT & 200, 316 stainless steel (FS model)	1
3	40930	40930	Cap screw, 3/8” NC x 3/4” hex head, stainless steel	1
4①②	30029	30029	Washer, 3/8” O.D., sealing, stainless steel	1
5	BAC-26-650	30169	Impeller, cast iron, e-coated	1
5	BAC-26-650-SS	30191	Impeller, stainless steel (optional)	1
6①	BAC-7-650	40145	Seal, carbon/ceramic/Viton®, 3/4”	1
6②	BAC-7SC-650	40146	Seal, silicon carbide/Viton®, 3/4” (optional)	1
6	BAC-7-650B	40144	Seal, carbon/ceramic/Buna N, 3/4” (for aqua ammonia)	1
7①②	BAC-4-150	40015	O-ring, volute seal	1
8	BAC-14-650-HYD	40325	Mounting frame, cast iron, e-coated	1
8	BAC-14-650-HYD-LIN	40343	Mounting frame, cast iron, e-coated, for liner (FS model)	1
8a	BAC-16-650-LIN	40344	Liner, 316 stainless steel (FS model)	1
9	40950	40950	Cap screw, 3/8” NC x 3/4” hex head	8
9	40930	40930	Cap screw, 3/8” NC x 3/4” hex head, stainless steel (optional)	8
10	BAC-54-650	41132	Slinger, 1.5” OD x 7/8” ID	1
11	41943	41943	Snap ring, internal, mounting frame	2
12	40875	40875	Bearing, FMC-650 models	2
13	BAC-6-650-HYD-SS	40051	Shaft, 1.13” dia., 11T female spline, stainless steel	1
14	41085	41085	Key, .188 x .188 x .875, FMC-650 models	1
15	43419	43419	O-ring, flange, M Series (effective 6/15)	1
16	43414	43414	Pad, absorbent, M Series (effective 6/15)	1
17	BAC-75-HYD-M16	41359	Motor, hydraulic, pressure plated gear, 14.5 gpm	1
17	BAC-75-HYD-M16-CD	41358	Motor, pressure plated gear, 14.5 gpm, case drain (optional)	1
18	42701	42701	Washer, 3/8”	2
19	41907	41907	Cap screw, 3/8” NC x 1”, socket head	2
20	41445	41445	O-ring, #10 SAE fitting	2
21	41442	41442	Reverse check, #10 SAE male x 1/2” NPT female	1
22	41446	41446	Body, adapter/restrictor, #10 SAE male x 1/2” NPT female	1
23	41448	41448	O-ring, restrictor insert	1
24	41447	41447	Restrictor orifice insert, .125	1
①	RK-FMC-650	52720	Repair kit, carbon/ceramic/Viton® seal, FMC-650 models	--
②	RK-FMCSC-650	52721	Repair kit, silicon carbide/Viton® seal, FMC-650 models	--

How to order:
Specify Mfr Part Number
Example: 30029

PTO Belt Driven Centrifugal Pumps

General Advantages

PTO belt driven centrifugal pumps were first introduced by Ace in 1964 and enabled the applicator to mount centrifugal pumps directly on 540 RPM and 1000 RPM tractor PTO shafts. The simple, yet durable design of the PTOC pump has withstood the test of time while many attempts at imitation have come and gone.

The key to success of the Ace belt driven pump has been the Spring Loaded Idler. The idler maintains proper belt tension which minimizes the load on the pump bearings. More importantly, the idler helps absorb the shock of PTO engagement that can destroy cog belts or gears.

Model PTOC belt driven pumps are easy to operate and maintain. Belts can be replaced in the field with minimum downtime and at little cost. Maintenance features also include sealed ball bearings and a readily replaceable mechanical seal. The belt guard provides complete coverage of the pulleys, shaft and belt. All PTO driven Roundup logo pumps are equipped with a stainless steel shaft and wear ring for excellent corrosion resistance.

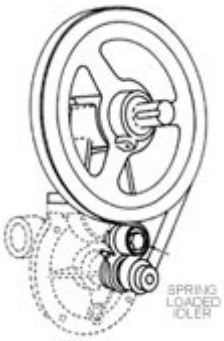

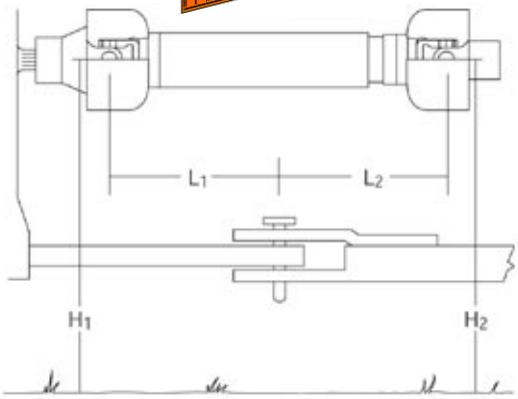

On trailer mounted units the hitch pin must be centered between the pump and tractor PTO shafts to minimize vibration transferred to the pump when turning.

PTOC-600
PTOC-1000

- The original belt drive standard since 1964
- Time tested and field proven design
- Widespread parts and service availability
- Most Economical belt drive

*See following pages for part's breakdown information.

1-1/4"	1"
SUCTION	DISCHARGE

Maximum Flow: 65 GPM (246 LPM)
Maximum Pressure: 80 PSI (5.5 BAR)

PTOC-600

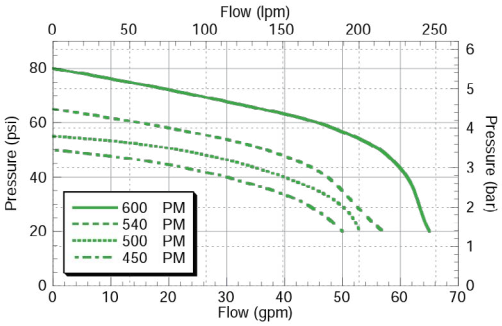

PTOC-1000

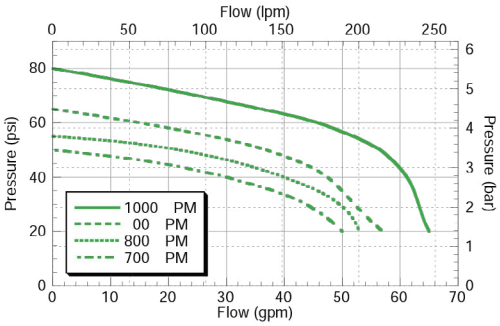

Continued on next Page

PTO Belt Driven Centrifugal Pumps

PTOC SERIES - Parts Breakdown

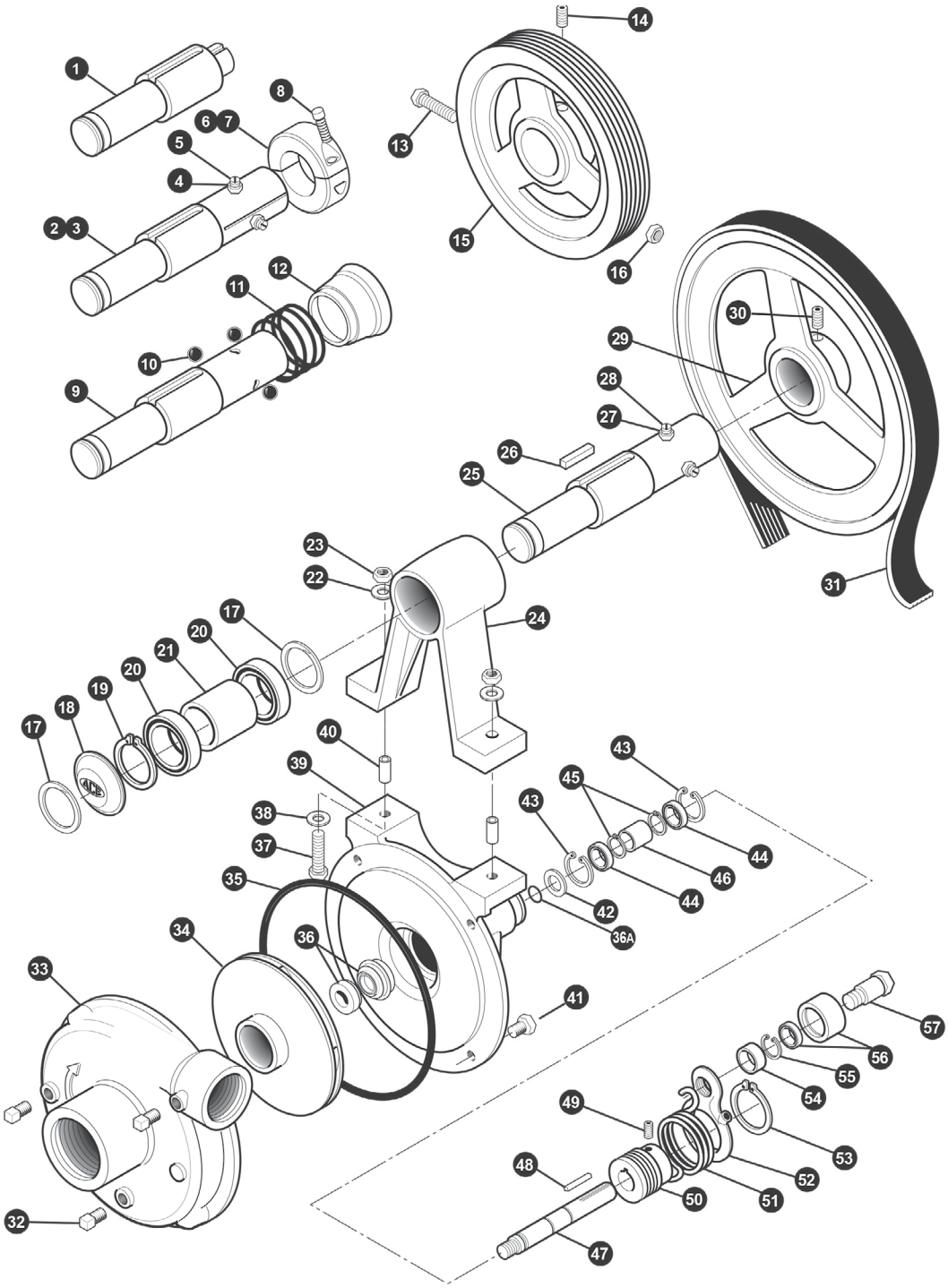

*See following page for part's breakdown information.

Continued on next Page

PTO Belt Driven Centrifugal Pumps

PTOC Series - Parts List

REF. #	MNF PART NO.	EDP #	DESCRIPTION	REQ.
1	BAC-10-S	40190	Shaft, 1" Tumblerod stub	1
2	BAC-10-175-20SP	40180	Shaft, 1-3/4" 20 Tooth PTO spline, includes BAC-11-175	1
3	BAC-10-21SP	40220	Shaft, 1 3/8" 21 Tooth PTO spline, includes BAC-11	1
4	40960	40960	Nut, 3/8" NC, jam	3
5	BAC-40	40940	Set screw, 3/8" NC slotted	3
6	BAC-11-175	40236	Locking collar, split ring (for BAC-10-175-20SP shaft)	1
7	BAC-11	40235	Locking collar, split ring (for BAC-10-21SP shaft)	1
8	BAC-11-1	40237	Set screw (for BAC-11 and BAC-11-175 locking collar)	1
9	BAC-10-6SP-QC	40210	Shaft, 1-3/8" 6 Tooth PTO spline, for quick coupler	1
10	BAC-83-QC	41470	Ball for quick coupler	3
11	BAC-82-QC	41460	Spring for quick coupler	1
12	BAC-81-QC	41450	Ball retainer sleeve for quick coupler	1
13	41250	41250	Cap screw, 5/16" NC x 3-1/4", hex head	1
14	41300	41300	Set screw, 3/8" NC x 5/8", allen head	2
15	BAC-30-10-M	40750	Pulley, 6.375" P.D. x 2" Bore, Poly-V (for PTOC-1000-21SP & -B)	1
15	BAC-30-175	40745	Pulley, 6.375" P.D x 2-3/8" Bore, Poly-V (for PTOC-1000-20SP)	1
16	BAC-63	41260	Nut, 5/16" NC, self locking, for tumblerod drive	1
17	BAC-34	40830	Snap ring, internal, BAC-15 bearing housing	2
18	BAC-27	40520	Name plate	1
19	BAC-35	40840	Snap ring, external, BAC-10 drive shaft	1
20	BAC-31-1	40781	Bearing, sealed, BAC-10 drive shaft	2
21	BAC-38-1	40905	Spacer, bearing, BAC-10 shaft	1
22	BAC-44	40990	Washer, 3/8" locking	2
23	BAC-45	41010	Nut, hex, 3/8" NC	2
24	BAC-15	40340	Housing, PTO drive shaft bearing housing	1
24	BAC-15-B	40370	Housing, tumblerod drive shaft bearing housing with mounting base	1
25	BAC-10-6SP	40200	Shaft, 1-3/8" 6 Tooth PTO spline drive	1
26	BAC-51	41090	Shaft, 3/8" x 1/2" x 1-1/2" key, PTO drive shaft	1
27	40960	40960	Nut, jam, 3/8" NC	3
28	BAC-40	40940	Set screw, 3/8" NC, slotted	3
29	BAC-30-10	40740	Pulley, 10.6" P.D. x 2" bore Poly-V pulley, 10 groove (for PTOC-600)	1
30	41300	41300	Set screw, 3/8" NC x 5/8", allen head	2
31 ①	BAC-28-10	40610	Belt, Poly-V, 10 groove (for PTOC-600)	1
31 ②	BAC-28-10-M	40620	Belt, Poly-V, 10 groove (for PTOC-1000)	1
32	BAC-53	41110	Pipe plug, 1/8" NPT	3
32	41120	41120	Pipe plug, 1/8" NPT, stainless steel (optional)	3
33	BAC-12	40250	Volute 1-1/4" x 1", cast iron	1
34	BAC-26-CI	40432	Impeller, cast Iron, left hand thread (optional)	1
34	BAC-26-VALOX	40430	Impeller, Valox, left hand thread	1
35 ①②③④	BAC-4-A	40005	O-ring, volute seal	1
36 ④	BAC-7SC	40152	Seal, silicon carbide mechanical (includes 40160) (optional)	1
36 ①②③	BAC-7V	40151	Seal, Viton, mechanical (includes 40160 O-ring)	1
36A ①②③④	40160	40160	O-ring for mechanical seal	1
37	BAC-42	40970	Cap screw, 3/8" NC x 2" hex head	2
38	BAC-43	40980	Washer, 3/8" flat	2
39	BAC-14-MIA	40290	Mounting frame, machined for idler arm	1
40	BAC-15-PIN	40799	Alignment pin	2
41	40950	40950	Cap screw, 3/8" NC x 3/4" hex head	4
41	40930	40930	Cap screw, 3/8" NC x 3/4" hex head, stainless steel (optional)	4
42	BAC-54	41130	Slinger	1
43	BAC-33	40810	Snap ring, internal, for mounting frame	2
44	BAC-37	40870	Bearing, sealed, for pump shaft	2
45	BAC-32	40790	Snap ring, external, for driven pump shaft	2
46	BAC-32-S	40795	Spacer for pump shaft	1
47	BAC-6-SS	40070	Shaft, 5/8", left hand course thread, stainless steel	1
48	BAC-50	41080	Key, 3/16" x 3/16" x 1-1/4"	1
49	BAC-57	41180	Cap screw, 5/16" NC x 5/16" allen head, for BAC-29-10 pulley	2
50	BAC-29-10-1.50	40680	Pulley, 1.5" P.D. x 5/8" bore, Poly-V, 10 groove	1
51	BAC-5	40030	Spring, idler mounted torsion	1
52	BAC-13	40270	Idler arm	1
53	BAC-36	40850	Snap ring, external, BAC-13 idler arm	1
54	BAC-46	41020	Spacer, 5/8"	1
55	41070	41070	Retainer ring	1
56	BAC-55	41140	Idler bearing and outer roller assembly	1
57	BAC-47	41040	Cap screw, 5/8" NC x 2 1/8" hex head idler	1
#	BAC-52	41100	Chain, 1/4" cold shut, torque anchor	1
#	BAC-58	41190	Zerk fitting, 1/4" NPT, for idler arm	1
#	BAC-55-A	41150	Idler arm assembly (includes 52 through 57 and BAC-58)	-
#	BGKB	52610	Belt and shaft guard kit for all PTOC pumps	-
①	RK-PTOC-600	51150	Repair kit for 600 RPM models, includes belt, seal, and "O" ring	-
②	RK-PTOC-1000	51250	Repair kit for 1000 RPM, includes belt, seal, and "O" ring	-
③	RK-FMC	52700	Repair kit for pump only, includes seal, and "O" ring	-
④	RK-FMCSC	52706	Repair kit for pump only, includes silicon carbide seal, and "O" ring	-
#	FMC-MIA	47000	Pump end only, machined to accept idler arm	-

Not shown in exploded view drawing.

How to order:
Specify Mfr Part Number
Example: 40160

PTO Belt Driven Centrifugal Pumps

PTO Shaft Options

- 6SP

1 3/8" (34.9 MM) 6 spline shaft for 540 RPM models

-6SPQC

Instant-attach quick coupler for 540 RPM models

-21SP

21 spline 1 3/8" (34.9 MM) split bore shaft with locking collar for 1000 RPM models

-20SP

20 spline 1 3/4" (44.5 MM) split bore shaft with locking collar for 1000 RPM models

-B

1" (25.4 MM) stub shaft for installation on trailer sprayers driven by PTO tumblerod

150 SERIES HIGH PERFORMANCE

PTOC-150-600
PTOC-150F-600
PTOC-150-1000
PTOC-150F-1000

SC CI PI BSP

1-1/4"	1-1/4"
SUCTION	DISCHARGE

Maximum Flow: 100 GPM (378 LPM)
Maximum Pressure: 110 PSI (7.6 BAR)

- The High Performance Pump. 100 PSI (6.9 BAR) at 40 GPM (151 LPM) due to increased pulley ratio and larger 1 1/2" x 1 1/4" construction
- Provides higher pressure and greater volume for applications with large tanks and long spray booms
- Allows fuel savings by operating at lower engine speeds while maintaining adequate spraying pressures
- F model equipped with NPT ports and industry standard flanged connections

*See following page for part's breakdown information.

PTOC-150-600

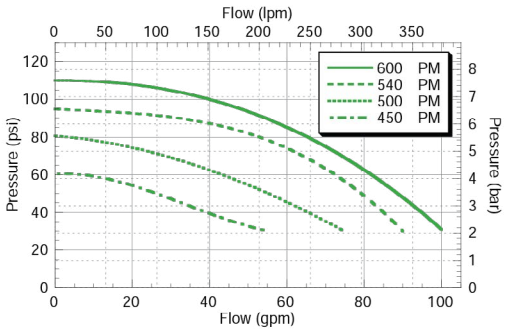

PTOC-150-1000

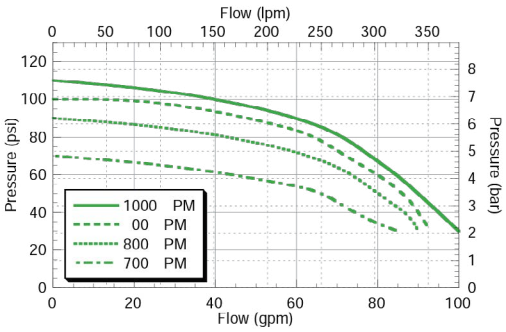

Continued on next Page

PTO Belt Driven Centrifugal Pumps

PTOC-150 Series - Parts Breakdown

ACE PUMPS

150 SERIES HIGH PERFORMANCE

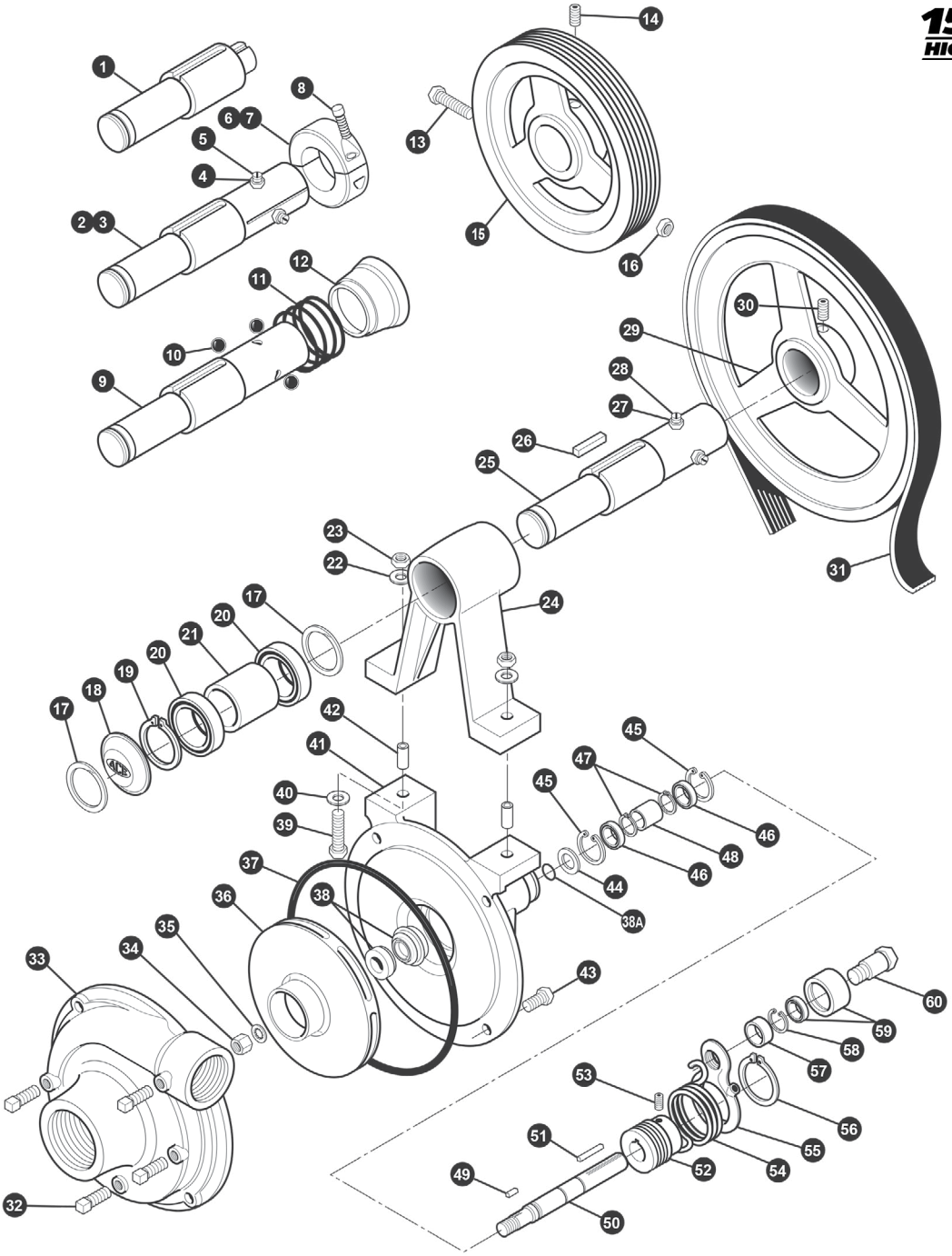

*See following page for part's breakdown information.

Continued on next Page

PTO Belt Driven Centrifugal Pumps

PTOC-150 Series - Parts List

ACE PUMPS

150 SERIES HIGH PERFORMANCE

How to order:
Specify Mfr Part Number
Example: 40160

REF. #	MNF PART NO.	EDP #	DESCRIPTION	REQ.
1	BAC-10-S	40190	Shaft, 1" Tumblerod stub	1
2	BAC-10-175-20SP	40180	Shaft, 1-3/4" 20 Tooth PTO spline, includes BAC-11-175	1
3	BAC-10-21SP	40220	Shaft, 1-3/8" 21 Tooth PTO spline, includes BAC-11	1
4	40960	40960	Nut, jam, 3/8" NC	3
5	BAC-40	40940	Set screw, slotted, 3/8" NC	3
6	BAC-11-175	40236	Locking collar, split ring (for BAC-10-175-20SP shaft)	1
7	BAC-11	40235	Locking collar, split ring (for BAC-10-21SP shaft)	1
8	BAC-11-1	40237	Set screw (for BAC-11 and BAC-11-175 locking collar)	1
9	BAC-10-6SP-QC	40210	Shaft, 1-3/8" 6 Tooth PTO spline, for quick coupler	1
10	BAC-83-QC	41470	Ball for quick coupler	3
11	BAC-82-QC	41460	Spring for quick coupler	1
12	BAC-81-QC	41450	Sleeve, ball retainer, for quick coupler	1
13	41250	41250	Cap screw, hex head, 5/16" NC x 3-1/4"	1
14	41300	41300	Set screw, allen head, 3/8" NC x 5/8"	2
15	BAC-30-10-M-150	40751	Pulley, 7.9" P.D. x 2" Bore, Poly-V, (for PTOC-150-1000-21SP)	1
15	BAC-30-175-150	40746	Pulley, 7.9"P.D x 2-3/8" Bore, Poly-V, (for PTOC-150-1000-20SP)	1
16	BAC-63	41260	Nut, self locking, 5/16" NC, for tumblerod drive	1
17	BAC-34	40830	Snap ring, internal, BAC-15 bearing housing	2
18	BAC-27	40250	Name plate	1
19	BAC-35	40840	Snap ring, external, BAC-10 drive shaft	1
20	BAC-31-1	40781	Bearing, sealed, BAC-10 drive shaft	2
21	BAC-38-1	40905	Spacer, BAC-10 shaft	1
22	BAC-44	40990	Washer, locking, 3/8"	2
23	BAC-45	41010	Nut, hex, 3/8" NC	2
24	BAC-15	40340	Housing, PTO drive shaft bearing	1
24	BAC-15-B	40370	Housing, tumblerod drive shaft bearing housing with mounting base	1
25	BAC-10-6SP	40200	Shaft, 1-3/8" 6 Tooth PTO spline	1
26	BAC-51	41090	Key, 3/8" x 1/2" x 1-1/2", PTO drive shaft	1
27	40960	40960	Nut, jam, 3/8" NC	3
28	BAC-40	40940	Set screw, slotted, 3/8" NC	3
29	BAC-30-10-150	40741	Pulley, 11.6" P.D. x 2" Bore, Poly-V, 10 groove (for 600 RPM models)	1
30	41300	41300	Set screw, allen head, 3/8" NC x 5/8"	2
31 ①	BAC-28-10-150	40611	Belt, Poly-V, 10 groove (for PTOC-150-600)	1
31 ②	BAC-28-10M-150	40621	Belt, Poly-V, 10 groove (for PTOC-150-1000)	1
32	BAC-53	41110	Pipe plug, 1/8" NPT	3
32	41120	41120	Pipe plug, 1/8" NPT, stainless steel (optional)	3
33	BAC-12-150	40255	Volute, 1-1/2" x 1-1/4", cast iron	1
34	BAC-23-A	40391	Nut, lock, 3/8" NF hex, cad plated	1
34	BAC-23-B-SS	40393	Nut, 3/8" NF, stainless steel (standard on -SS models)	1
35 ①②③④	BAC-24-HYD-SS	40400	Washer, 3/8", stainless steel	1
35	BAC-24-B-SS	42702	Washer, 3/8", stainless steel, vibration proof (standard on -SS models)	1
36	BAC-26-150-P	40446	Impeller, thermoplastic, with keyway	1
36	BAC-26-150-CI	40445	Impeller, cast iron, with keyway(optional)	1
36	BAC-26-150-PI	40448	Impeller, polypropylene, with keyway(optional)	1
37 ①②③④	BAC-4-150	40015	O-ring volute seal	1
38 ①②③	BAC-7V	40151	Seal, Viton mechanical seal (includes 40160 "O" Ring)	1
38 ④	BAC-7SC	40152	Seal, silicon carbide mechanical seal (includes 40160) (optional)	1
38A ①②③④	40160	40160	O-ring for mechanical seal	1
39	BAC-42	40970	Cap screw, hex head, 3/8" NC x 2"	2
40	BAC-43	40980	Washer, flat, 3/8"	2
41	BAC-14-150-MIA	40308	Mounting frame, machined for idler arm	1
42	BAC-15-PIN	40799	Alignment pin	2
43	40930	40930	Cap screw, hex head, 3/8" NC x 3/4", stainless steel (optional)	4
43	40950	40950	Cap screw, hex head, 3/8" NC x 3/4"	4
44	BAC-54	41130	Slinger	1
45	BAC-33	40810	Snap ring, internal, for mounting frame	2
46	BAC-37	40870	Bearing, sealed, for pump shaft	2
47	BAC-32	40790	Snap ring, external, for driven pump shaft	2
48	BAC-32-S	40795	Spacer for pump shaft	1
49	BACH-25	40420	Key, for impeller, 1/8" x 1/8" x 1/2"	1
50	BAC-6-150/200-SS	40056	Shaft, 5/8", with keyway, stainless steel	1
51	BAC-50	41080	Key, 3/16" x 3/16" x 1-1/4"	1
52	BAC-29-10-1.35	40675	Pulley, 1.35" P.D. x 5/8" Bore, Poly-V, 10 groove(PTOC-150-600)	1
52	BAC-29-10-1.7	40681	Pulley, 1.7" P.D. x 5/8" Bore, Poly-V, 10 groove(PTOC-150-1000)	1
53	BAC-57	41180	Set screw, allen head, 5/16" NC x 5/16", for BAC-29-10 pulley	2
54	BAC-5-150	40035	Spring, idler mounted torsion, for 150 series	1
55	BAC-13	40270	Idler arm	1
56	BAC-36	40850	Snap ring, external, BAC-13 idler arm	1
57	BAC-46	41020	Spacer, 5/8"	1
58	41070	41070	Retainer ring	1
59	BAC-55	41140	Idler bearing and outer roller assembly	1
60	BAC-47	41040	Cap screw, hex head, 5/8" NC x 2-1/8", idler	1
#	BAC-52	41100	Chain, 1/4" cold shut, torque chain anchor	1
#	BAC-58	41190	Zerk fitting, 1/4" NPT, for idler arm	1
#	BAC-55-A	41150	Idler arm assembly (includes 55 through 60 and BAC-58)	-
#	BGKB	52610	Belt and shaft guard kit for all PTOC pumps	-
①	RK-PTOC-150-600	51155	Repair kit for 600 RPM models, includes belt, seal, and O-ring	-
②	RK-PTOC-150-1000	51255	Repair kit for 1000 RPM, includes belt, seal, and O-ring	-
③	RK-FMC-150	52710	Repair kit for pump only, includes seal, and O-ring	-
④	RK-FMCSC-150	52711	Repair kit for pump only, includes silicon carbide seal, and O-ring	-
#	FMC-150-MIA	47008	Pump end only, machined to accept idler arm	-

Not shown in exploded view drawing.

Gasoline Engine Driven Centrifugal Pumps

General Advantages

- Ace offers a complete line of Gasoline Engine Driven Centrifugal Pumps. The pumps provide service where power sources are limited or unavailable. The pumps are ideally suited to develop pressure for spray or transfer applications
- The pumps feature a direct coupled design with an easily replaceable mechanical seal and slinger ring between the pump and engine to prevent liquid from damaging the engine
- The pumps are available complete or less engine (-LE). Complete units come assembled on the specified engine ready to install and run. Less engine (-LE) units come with all hardware necessary to mount on the specified engine

GE-75

- Tall Blade Impeller design – higher pressure at standard engine speeds
- GE-75 Impeller attaches directly to 5/8" (1.59 CM) keyed shaft engine
- All Polypropylene corrosion resistant construction
- GE-75 available complete or less engine (-LE)

SC

1"	3/4"
SUCTION	DISCHARGE

Maximum Flow: 25 GPM (95 LPM)
Maximum Pressure: 70 PSI (4.8 BAR)

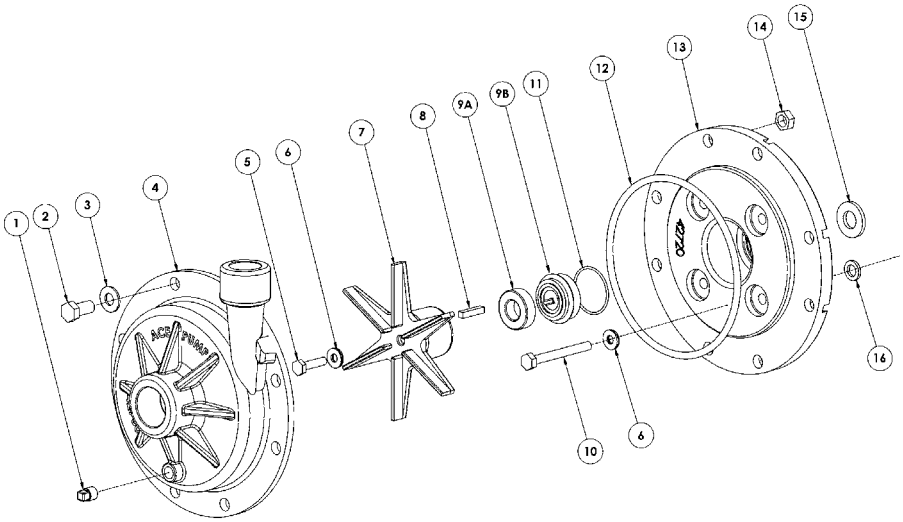

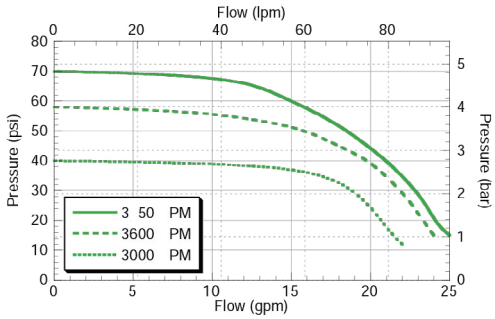

Note: Graph for GE-75 model with Honda GX-100 engine.

REF. #	MNF PART NO.	EDP #	DESCRIPTION	REQ.
1	BAC-53-P	41119	Pipe plug, 1/8" NPT, plastic	1
2	80250	80250	Cap screw, 3/8"-16 x 7/8", hex head	8
3	42701	42701	Washer, 3/8" flat	8
4	GE-12-75	42700	Volute, 3/4" x 1", polypropylene	1
5	42240	42240	Cap screw, 1/4"-28 x 1", hex, stainless steel	1
6①②	30028	30028	Washer, sealing	5
7	GE-26-75	42710	Impeller, with keyway, polypropylene	1
8	41082	41082	Key, 3/16" x 3/16" x 15/16"	1
9①	BAC-7-75V	42730	Seal, 5/8" , viton type rubber	1
9②	BAC-7SC-75V	42731	Seal, 5/8" , silicon carbide, viton type rubber (optional)	1
10	42245	42245	Cap screw, M8 x 60, stainless steel (Honda)	4
10	42238	42238	Cap screw, 5/16"NF x 2-1/4"(Briggs)	4
11①②	40159	40159	O-ring, shaft seal, GE-75	1
12①②	40017	40017	O-ring, volute seal, GE-75	1
13	GE-14-75	42720	Bracket, GE-75, polypropylene	1
14	BAC-45	41010	Nut, hex, 3/8"	8
15	BAC-54	41130	Slinger	1
16	41488	41488	Spacer, bracket (Briggs)	4
#	42055	42055	Engine, 3 HP, Honda GX100QA2	1
①	RK-GE-75	60840	Repair kit for GE-75	-
②	RK-GESC-75	60841	Repair kit for GE-75; silicon carbide (optional)	-

How to order:
Specify Mfr Part Number
Example: 40120

Gasoline Engine Driven Centrifugal Pumps

General Advantages

- Ace offers a complete line of Gasoline Engine Driven Centrifugal Pumps. The pumps provide service where power sources are limited or unavailable. The pumps are ideally suited to develop pressure for spray or transfer applications
- The pumps feature a direct coupled design with an easily replaceable mechanical seal and slinger ring between the pump and engine to prevent liquid from damaging the engine
- The pumps are available complete or less engine (-LE). Complete units come assembled on the specified engine ready to install and run. Less engine (-LE) units come with all hardware necessary to mount on the specified engine

GE-85

- Tall Blade Impeller design – higher pressure at standard engine speeds
- All Polypropylene corrosion resistant construction
- GE-85 Impeller attaches directly to 3/4" (1.91 CM) keyed shaft engine
- GE-85 available less engine (-LE)

1"	3/4"
SUCTION	DISCHARGE

Maximum Flow: 24 GPM (91 LPM)
Maximum Pressure: 65 PSI (4.5 BAR)

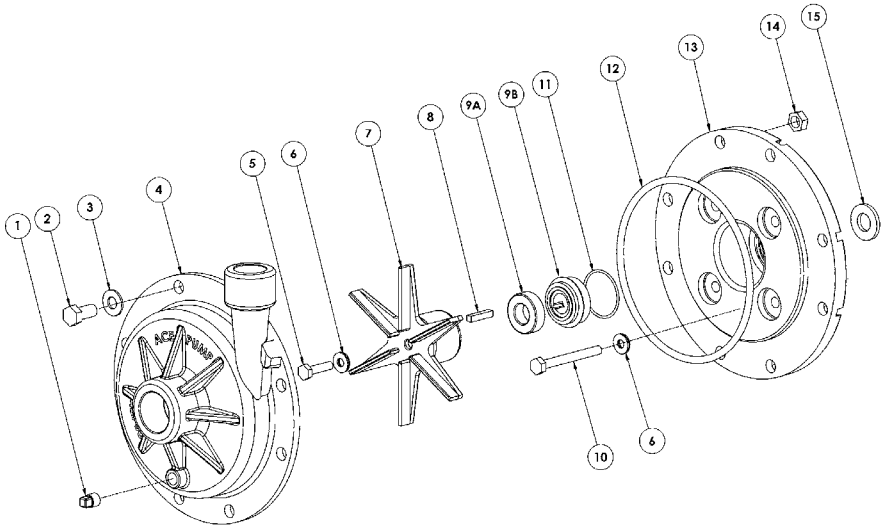

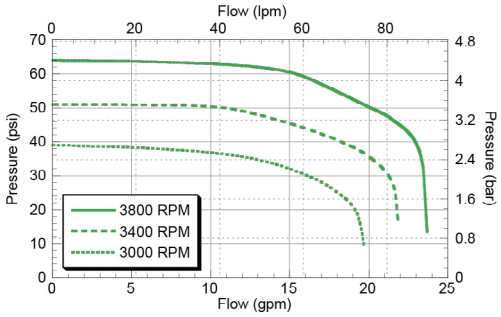

Note: Graph for GE-85 model with Honda GC-160 engine.

REF. #	MNF PART NO.	EDP #	DESCRIPTION	REQ.
1	BAC-53-P	41119	Pipe plug, 1/8" NPT, plastic	1
2	80250	80250	Cap screw, 3/8"-16 x 7/8", hex head	8
3	42701	42701	Washer, 3/8" flat	8
4	GE-12-75	42700	Volute, 3/4" x 1", polypropylene	1
5	GE-60-SS	42235	Cap screw, 5/16"-NF x 3/4", hex, stainless steel	1
6①②	30028	30028	Washer, sealing	5
7	GE-26-85	42711	Impeller, with keyway, polypropylene	1
8	41082	41082	Key, 3/16" x 3/16" x 15/16"	1
9①	BAC-7-660V	30225	Seal, 3/4" , Viton® type rubber	1
9②	BAC-7SC-660V	30226	Seal, 3/4" , Carbide/Ceramic/Viton® (optional)	1
10	42245	42245	Cap screw, M8 x 60, stainless steel (GC-160)	4
10	42238	42238	Cap screw, 5/16"NF x 2-1/4", (GX-160)	4
11①②	40159	40159	O-ring, shaft seal, GE-85	1
12①②	40017	40017	O-ring, volute seal, GE-85	1
13	GE-14-85	42721	Bracket, GE-85, polypropylene	1
14	BAC-45	41010	Nut, hex, 3/8"	8
15	GE-54	42220	Slinger	1
①	RK-GE-85	60845	Repair kit for GE-85	-
②	RK-GESC-85	60846	Repair kit for GE-85, silicon carbide seal	-

How to order:
Specify Mfr Part Number
Example: 41120

Gasoline Engine Driven Centrifugal Pumps

GE-100-A

- Impeller attaches directly to 5/8" (1.59 CM) NF threaded shaft on 3 HP (2.8 KW) to 5.5 HP (4.1 KW) engine
- Stainless steel shaft sleeve with o-ring leak protection
- All iron construction
- Available complete or less engine (-LE)

1-1/4''	1''
SUCTION	DISCHARGE

Maximum Flow: 50 GPM (189 LPM)
Maximum Pressure: 50 PSI (3.4 BAR)

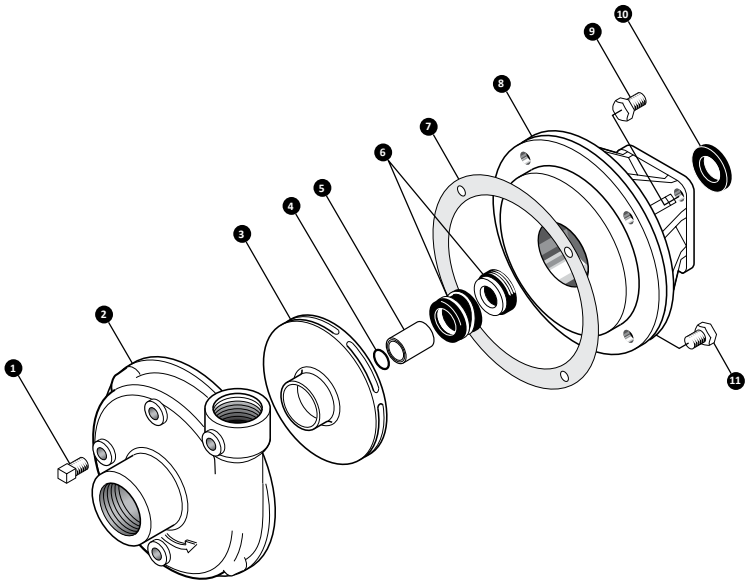

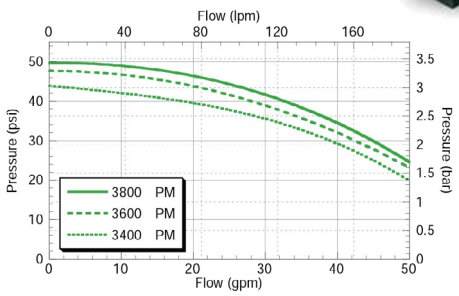

REF. #	MNF PART NO.	EDP#	DESCRIPTION	REQ.
1	BAC-53	4 1110	Pipe plug, 1/8" NPT	4
1	41120	4 1120	Pipe plug, 1/8" NPT, stainless steel (optional)	4
2	5AC-10	3 0100	Volute, 1-1/4" x 1", cast iron	1
3	GE-26-A	4 2161	Impeller, cast iron, right hand 5/8" thread	1
4*	GE-8-V-A	4 2132	O-ring, shaft sleeve, Viton	1
5	GE-6-SS-A	42105	Sleeve for 1" OD shaft, stainless steel	1
6*	GE-7-V	42120	Seal, 1" Type 6 mechanical seal, Viton	1
7*	31040	31040	Gasket, volute, 4 hole	1
8	GE-9-A	42151	Bracket, cast iron	1
9	GE-60	42230	Cap screw, 5/16" NF x 3/4"	4
9	GE-60-SS	4 2235	Cap screw, 5/16" NF x 3/4", stainless steel (optional)	4
10	GE-54	4 2220	Slinger	1
11	40950	4 0950	Cap screw, 3/8" NC x 3/4"	4
11	40930	4 0930	Cap screw, 3/8" NC x 3/4", stainless steel (optional)	4
#	GE-1-A	4 2060	3-1/2 HP gasoline engine, Briggs & Stratton	1
#	GE-2	42070	Handle(optional)	1
#	GE-3	42080	Steel base (optional)	1
#	GE-62	42250	Cap screw, 5/16" NC x 1-1/2", engine to base	4
#	42270	42270	Nut, 5/16" NC hex, engine to base	4
#	RK-GE-100-A	60855	Repair kit for GE-100-A	#

* Items included in pump repair kit.

How to order:
Specify Mfr Part Number
Example: 40120

Westward Parts can source many other special order items that are not listed in this catalogue, please visit our website at westwardparts.com or call us directly at 1-888-937-7278. Our team will help you find what you need.
The product images shown are for illustration purposes only and may not be an exact representation of the product.

Gasoline Engine Driven Centrifugal Pumps

Pumps

GE-650

- Impeller attaches directly to 5/8" (1.59 cm) NF threaded shaft on 5.5 HP (4.1 KW) engine
- Stainless steel shaft sleeve with o-ring leak protection
- All iron construction
- Available complete or less engine

SC (GE-660 only)

1-1/2"	1-1/4"
SUCTION	DISCHARGE

Maximum Flow: 110 GPM (416 LPM)
Maximum Pressure: 120 PSI (8.3 BAR)

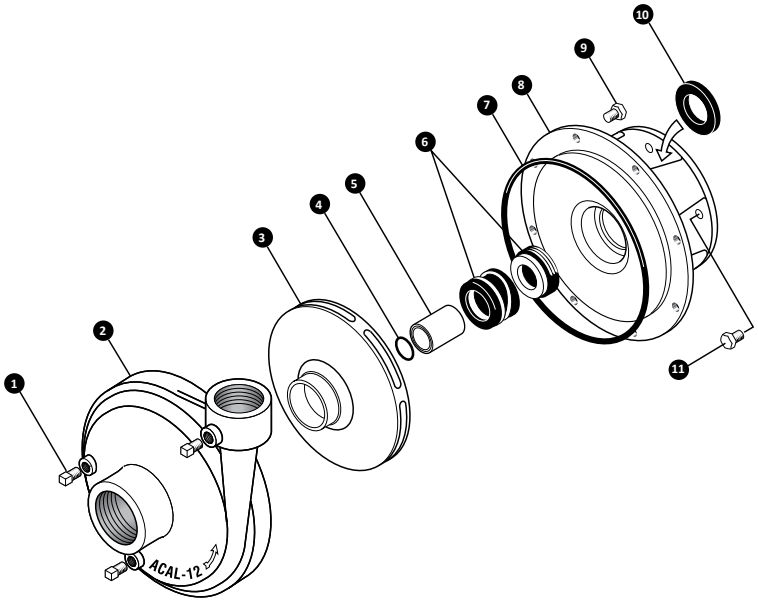

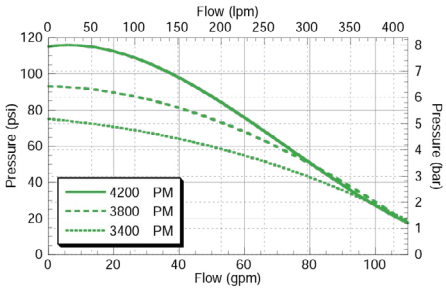

REF. #	MNF PART NO.	EDP#	DESCRIPTION	REQ.
1	BAC-53	4 1110	Pipe plug, 1/8" NPT	3
1	41120	4 1120	Pipe plug, 1/8" NPT, stainless steel (optional)	3
2	ACAL-12	3 0161	Volute, 1 1/2" x 1 1/4", clockwise rotation	1
3	ACAL-28	3 0173	Impeller, cast iron, right hand thread	1
*4	GE-8-V-A	4 2132	"O" Ring for GE-6-A-SS shaft sleeve	1
*5	GE-6-SS-A	42105	Sleeve for 1" O.D. shaft, stainless steel	1
*6	GE-7-V	42120	Seal, 1" Type 6 mechanical seal, Viton	1
*7	BAC-4-150	40015	"O" Ring, volute seal	1
*8	ACAL-55	30185	Bracket	1
*9	40950	40950	Cap screw, 3/8" NC x 3/4" hex head	8
*9	40930	4 0930	Cap screw, 3/8"NC x 3/4", stainless steel (optional)	8
10	GE-54	4 2220	Slinger	1
*11	GE-60	4 2230	Cap screw, 5/16" NF x 3/4"	4
*11	GE-60-SS	4 2235	Cap screw, 5/16" NF x 3/4", stainless steel (optional)	4
*#	42068	4 2068	Engine, 5.5 HP Honda (GX160K1TX2)	1
#	42069	42069	Engine, 5.5 HP Briggs & Stratton (110432-0035-E1)	1
*#	RK-GE-650	61153	Repair kit	1

How to order:
Specify Mfr Part Number
Example: 41120

* Items included in pump repair kit.

Westward Parts can source many other special order items that are not listed in this catalogue, please visit our website at westwardparts.com or call us directly at 1-888-937-7278. Our team will help you find what you need.
The product images shown are for illustration purposes only and may not be an exact representation of the product.

Gasoline Engine Driven Centrifugal Pumps

GE-660

- Impeller attaches directly to 3/4" (1. 91cm) keyed shaft on 5.5 HP (4.1 KW) engine
- Stainless steel shaft sleeve with o-ring leak protection
- All iron construction
- Available complete or less engine

SC (GE-660 only)

1-1/2"	1-1/4"
SUCTION	DISCHARGE

Maximum Flow: 110 GPM (416 LPM)
Maximum Pressure: 120 PSI (8.3 BAR)

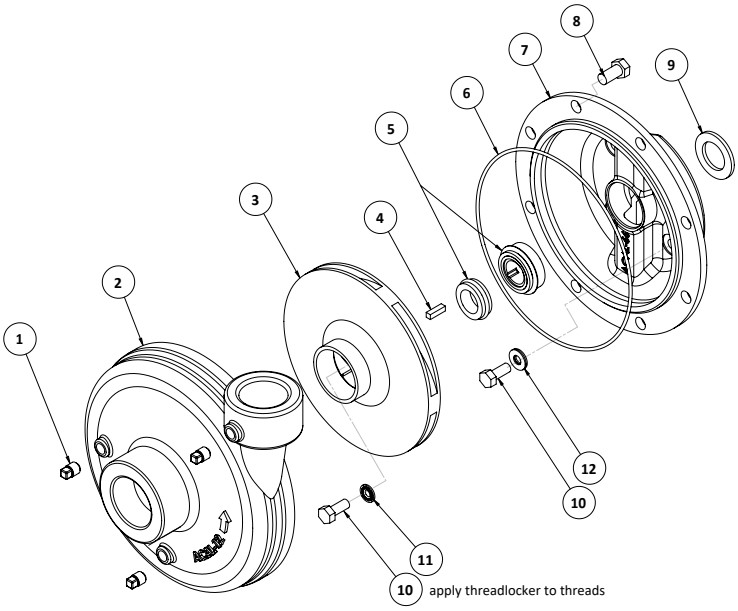

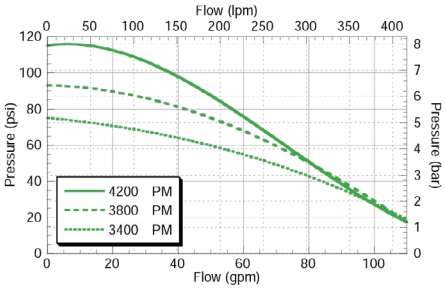

REF. #	MNF PART NO.	EDP #	DESCRIPTION	REQ.
1	BAC-53	41110	Pipe plug, 1/8" NPT	3
1	41120	41120	Pipe plug, 1/8" NPT, stainless steel (optional)	3
2	ACAL-12	30161	Volute, 1 1/2" x 1 1/4", clockwise rotation	1
2	ACAL-12-EC	30196	Volute, 1 1/2" x 1 1/4", clockwise rotation, e-coated (optional)	1
3	ACAL-28-660	30171	Impeller, cast iron, 3/4" keyed shaft	1
3	ACAL-28-660-EC	30195	Impeller, cast iron, 3/4" keyed shaft, e-coated (optional)	1
4	41081	41081	Key, impeller, 3/16" x 3/16" x 3/4",	1
5①	BAC-7-660V	30225	Seal, Type 6A-3/4, carbon/ceramic/Viton	1
5②	BAC-7SC-660V	30226	Seal, Type 6A-3/4, silicon carbide/Viton	1
6①②	BAC-4-150	40015	O-ring, volute seal	1
7	ACAL-66	30186	Bracket, GE-660 keyed shaft	1
7	ACAL-66-EC	30197	Bracket, GE-660 keyed shaft, e-coated (optional)	1
8	40950	40950	Cap screw, 3/8" NC x 3/4" hex head	8
8	40930	40930	Cap screw, 3/8"NC x 3/4", stainless steel (optional)	8
9	GE-54-660	42222	Slinger	1
10	GE-60-SS	42235	Cap screw, 5/16" NF x 3/4", stainless steel	5
11①②	30031	30031	Washer, Stat-O-Seal®, 5/16" ID, impeller attachment (effective Oct. 2011) 1	
12①②	30028	30028	Washer, sealing, 5/16" ID, bracket attachment	4
*①②	30035	30035	Threadlocker, removable	-
*	42062	42062	Engine, 5.5 HP Honda, pull start, (GX160UT1QX2)	1
*	42064	42064	Engine, 5.5 HP Honda, electric start, (GX160K1QXE2)	1
①	RK-GE-660	61162	Repair kit	-
②	RK-GESC-660	61167	Repair kit with silicon carbide shaft seal	-

How to order:
Specify Mfr Part Number
Example: 40930

Gasoline Engine Driven Centrifugal Pumps

GE-800

- Impeller attaches directly to 1" (2.54 CM) - 14 NF threaded shaft on 8 HP (5.9 KW) to 10 HP (7.5 KW) engine
- Stainless steel shaft sleeve with double o-ring leak protection
- All iron construction
- Available less engine (-LE)

2"	1-1/2"
SUCTION	DISCHARGE

Maximum Flow: 140 GPM (530 LPM)
Maximum Pressure: 140 PSI (9.7 BAR)

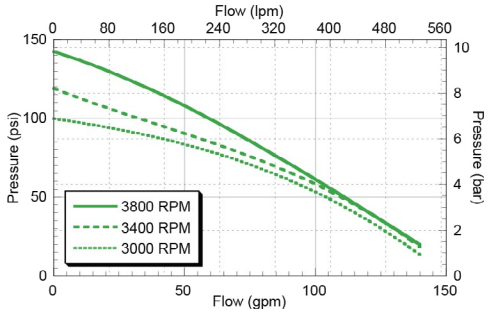

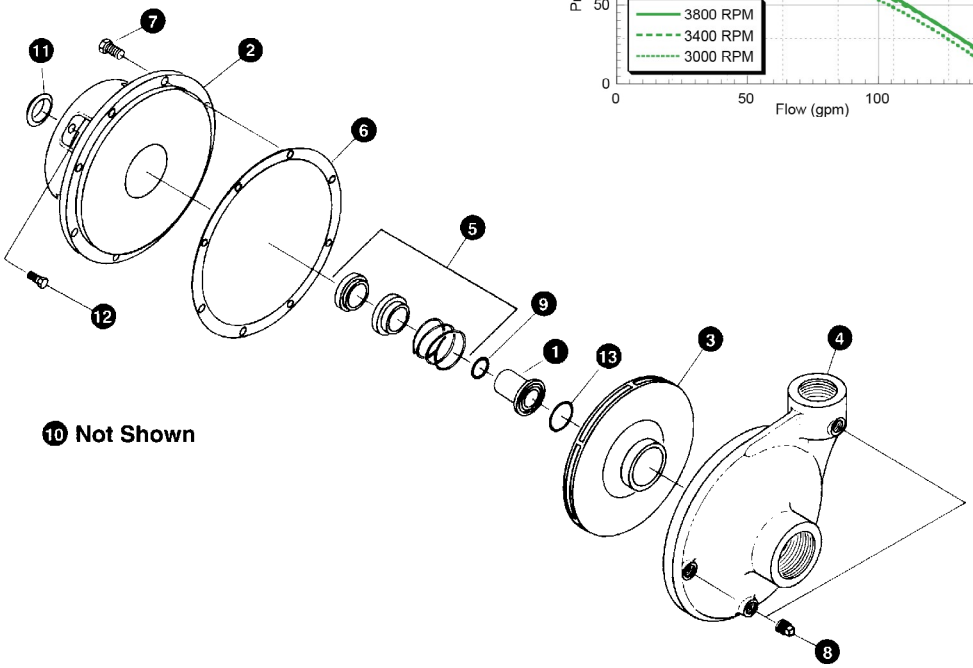

⑩ Not Shown

REF. #	MNF PART NO.	EDP #	DESCRIPTION	REQ.
1	ACAL-7-SS	30018	Shaft sleeve, GE-800, stainless steel	1
2	ACAL-143	30045	Bracket, cast iron	1
3	ACAL-26-TH	30047	Impeller, GE-800, cast iron	1
4	ACAL-14	30160	Volute, 2" x 1 1/2"	1
5①	TYPE 21-1.25	30265	Seal, 1.25" Type 21 mechanical seal, Viton	1
5②	TYPE 21-1.25-SG	30266	Seal, 1.25" Type 21, silicon graphite/Viton (optional)	1
6	ACAL-4	30009	"O" Ring gasket for ACAL-14 volute	1
6①②	9000	31130	Gasket, 8 hole (obsolete 12/94)	1
7	BAC-39	40950	Cap screw, 3/8" NC x 3/4"	8
7	BAC-39-SS	40930	Cap screw, 3/8" NC x 3/4", stainless steel (optional)	8
8	BAC-53	41110	1/8" NPT Pipe plug	3
8	41120	41120	1/8" NPT Pipe plug, stainless steel (optional)	3
9①②	41860	41860	"O" Ring, engine shaft	1
10	42066	42066	Gas engine, 8 HP Honda, pull start	1
11	GE-55	42221	Slinger	1
12	SP-62	42255	Cap screw, 5/16" NF x 1"	4
12A	GE-44	42200	Lock washer, 5/16" (not shown)	4
13①②	72990	72990	"O" Ring, shaft sleeve seal	1
①	RK-GE-800/1600	61000	Repair kit for GE-800 and GE-1600	-
②	RK-GE-800/1600-SG	61005	Repair kit for GE-800 and GE-1600, silicon graphite/Viton	-

How to order:
Specify Mfr Part Number
Example: SP-55

Gasoline Engine Driven Centrifugal Pumps

GE-860

- Impeller attaches directly to 1" (2.54 CM) keyed shaft on 8 HP (5.9 KW) to 10 HP (7.5 KW) engine
- Optional electric start engine
- All iron construction
- Available complete or less engine (-LE)

2"	1-1/2"
SUCTION	DISCHARGE

Maximum Flow: 140 GPM (530 LPM)
Maximum Pressure: 140 PSI (9.7 BAR)

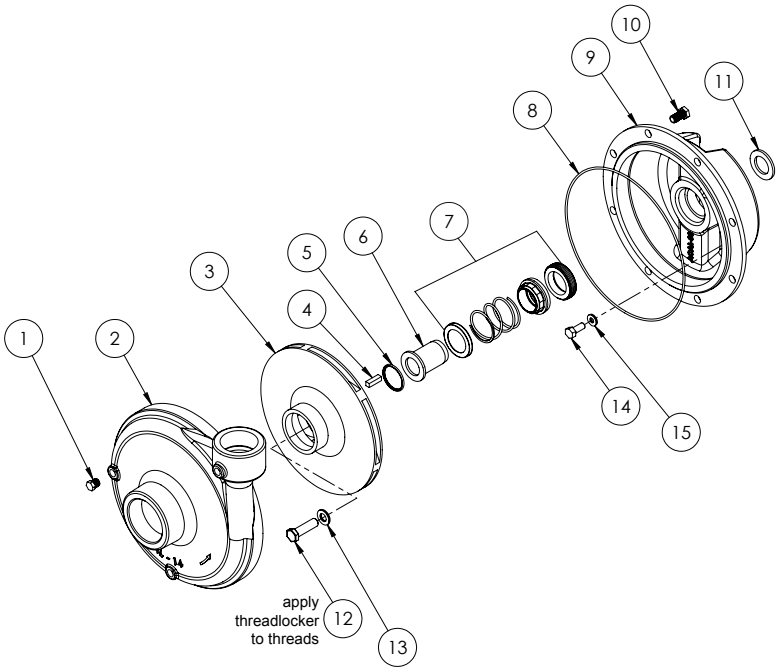

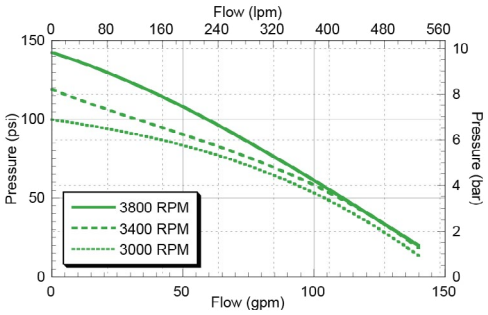

REF. #	MNF PART NO.	EDP #	DESCRIPTION	REQ.
1	BAC-53	41110	Pipe plug, 1/8" NPT	3
1	41120	41120	Pipe plug, 1/8" NPT, stainless steel (optional)	3
2	ACAL-14	30160	Volute, 2" x 1-1/2", cast iron	1
3	ACAL-26-860	30558	Impeller, GE-860, cast iron with keyway	1
4	41083	41083	Key, 1/4" x 1/4" x 7/8"	1
5①	41865	41865	"O" Ring, impeller	1
6	42108	42108	Shaft sleeve, GE-860, stainless steel	1
7①	TYPE 21-1.250-V60	30267	Seal, 1.25" Type 21 mechanical seal, Viton®	1
7	TYPE 21-1.250-V60-SG	30268	Seal, 1.25" Type 21, silicon graphite/Viton® (optional)	1
8①	ACAL-4	30009	"O" Ring gasket for ACAL-14 volute	1
9	ACAL-88	30187	Bracket, cast iron	1
10	40950	40950	Cap screw, 3/8" NC x 3/4"	8
10	40930	40930	Cap screw, 3/8" NC x 3/4", stainless steel (optional)	8
11	GE-54	42220	Slinger, 1" ID x 1-5/8" OD x 1/8"	1
12	30022	30022	Cap screw, 7/16"-20 UNF x 1-1/4", stainless steel	1
13①	30023	30023	Washer, 7/16" sealing	1
14	GE-60-SS	42235	Cap screw, 5/16" NF x 3/4" , stainless steel	4
15①	30028	30028	Washer, 5/16" sealing, stainless steel	4
#	42072	42072	Gas engine, 7.9 Net HP Honda®, pull start, GX240UT2QA2	1
#	42067	42067	Gas engine, 7.9 Net HP Honda®, electric start, GX240UT2QAE2	1
①	RK-GE-860/1660	61010	Repair kit for GE-860	-

How to order:
Specify Mfr Part Number
Example: 30028

Belt Driven Centrifugal Pumps

Frame Mount Advantages

Ace belt driven pumps are available in a variety of models which may be belt driven or direct coupled to a power source. The pumps are available in either clockwise or counterclockwise rotation. The standard bare shaft pumps are designed with a keyway for mounting a drive pulley or coupling.

Magnetic Clutch Driven Advantages

These models enable the operator to free the PTO shaft and hydraulic system for other uses. The 12 volt DC magnetic clutch is driven by a v-belt from the engine drive shaft. The clutch is idle until engaged by an on-off toggle switch located at the driver's seat.

Typical Clutch Installation

Ace magnetic clutch driven frame mounted centrifugal pump models are available with counterclockwise (CCW) rotation and clockwise (CW) rotation. The direction of rotation is determined when facing the shaft. Sizes available are 1-1/4" x 1", 1-1/2" x 1-1/4", and 2" x 1-1/2".

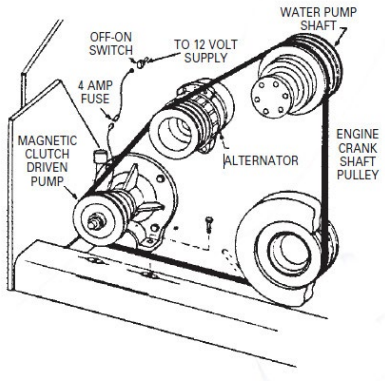

FMC-CW-200-MAG-D

-MAG-D Clutch

- 58 ft. lb. (78.6 NM) torque capacity
- Forged machined pulley for maximum strength
- Solid forged rotor to maximize torque
- E-coated for maximum corrosion protection
- High temperature epoxy coil
- Two bearings with high temperature, long life grease
- Single or double belt drive
- 4 3/4" (12.1 CM) pitch diameter

FMC-CW-200-X

-X Frame Option

- 3/4" (1.91 CM) diameter stainless steel shaft, standard models 5/8" diameter (1.59 CM)
- Larger bearings for extended life
- Available with MAG-D clutch
- 5 1/4" (13.34 cm) mounting bolt spacing
- -X3 frame has 3" (7.62 CM) bolt spacing

Pump Rotation

- The direction of rotation is always determined WHEN FACING THE SHAFT. This rule applies for the pump shaft and the drive shaft. Ace Frame Mounted pumps are available in both clockwise (CW) and counter-clockwise (CCW) rotation. Ace model numbers which include a "CW" have a clockwise rotation; all other models are counterclockwise rotation.
- When direct coupling shafts, always MATCH THE OPPOSITE ROTATION pump with the shaft. As illustrated, a gasoline engine with CCW rotation will direct couple to a FMC-CW-800 pump with clockwise rotation. When mounting a pump with belts and pulleys, either pump rotation can be used to match the drive shaft rotation and the desired direction of the pump.
- The rotation of several common power sources are as follows: Gasoline engine and electric motor shafts rotate in a counterclockwise direction; a tractor PTO shaft rotates in a clockwise direction; the front tractor engine crankshaft rotates in a counterclockwise direction.

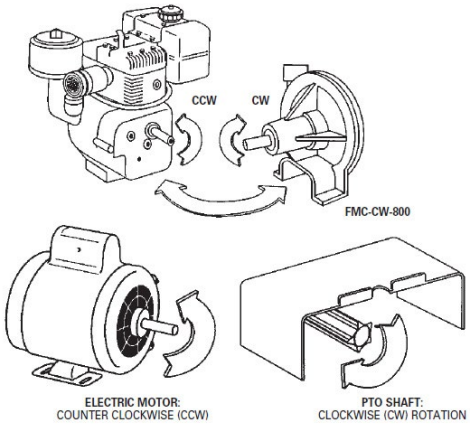

Belt Driven Centrifugal Pumps

Counterclockwise Rotation

FMC
FMC-MAG-D

- Counterclockwise Rotation when facing shaft end
- Stainless Steel Shaft and Wear Ring
- Chemical resistant thermoplastic or optional Cast Iron Impeller (CI)
- Standard Carbon/Ceramic seal or optional Severe Duty Silicon Carbide Mechanical seal (SC)
- X option includes larger 3/4" (1.9 cm) diameter shaft and larger bearings for longer life

SC CI BSP

1-1/4"	1"
SUCTION	DISCHARGE

Maximum Flow: 70 GPM (265 LPM)
Maximum Pressure: 170 PSI (11.7 BAR)
Maximum Power: 4.2 HP (3.1 KW)

ACE PUMPS

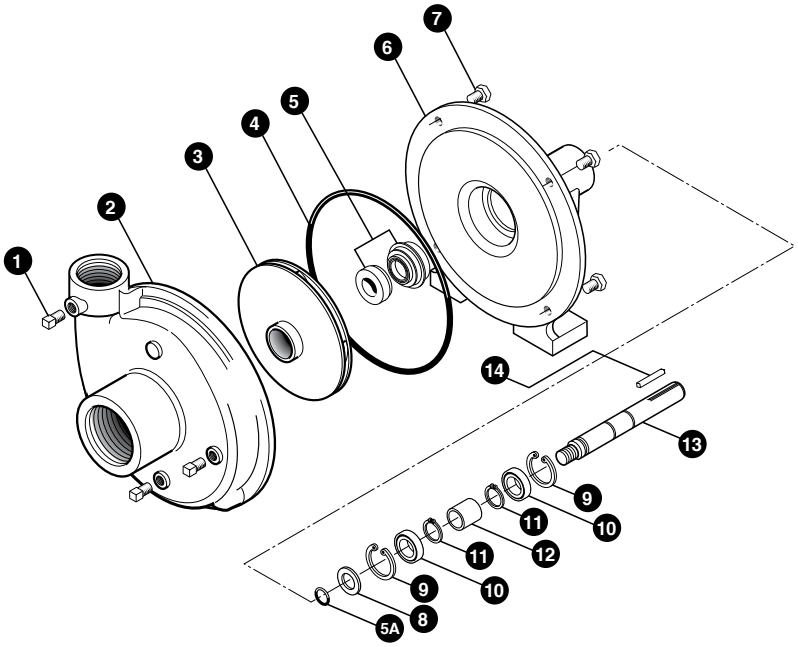

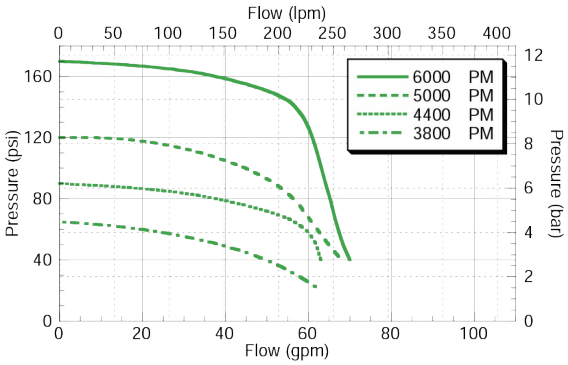

REF. #	MNF PART NO.	EDP #	DESCRIPTION	REQ.
1	BAC-53	41110	Pipe plug	3
1	41120	41120	Pipe plug, stainless steel (optional)	3
2	BAC-12	40250	Volute, 1 1/4" x 1"	1
3	BAC-26-VALOX	40430	Impeller, Valox, left hand thread	1
3	BAC-26-CI	40432	Impeller, cast iron, left hand thread (optional)	1
4①②	BAC-4A	40005	O-ring, body seal	1
4	BAC-4	40010	Gasket, 4 hole, (obsolete 1996)	1
5①	BAC-7V	40151	Seal, mechanical, Viton, includes 40160 "O" Ring	1
5②	BAC-7SC	40152	Seal, mechanical, silicon carbide, includes 40160 (optional)	1
5A①②	40160	40160	"O" Ring for BAC-6 shaft	1
6	BAC-14-F	40310	Mounting frame	1
7	40950	40950	Cap screw, 3/8" NC x 3/4" hex head	4
7	40930	40930	Cap screw, 3/8" NC x 3/4" hex head, stainless steel (optional)	4
8	BAC-54	41130	Slinger	1
9	BAC-33	40810	Snap ring, internal, BAC-14 mounting frame	2
10	BAC-37	40870	Ball bearing, sealed, BAC-6 shaft	2
11	BAC-32	40790	Snap ring, external, BAC-6 shaft	2
12	BAC-32-S	40795	Spacer for BAC-6 shaft	1
13	BAC-6-SS	40070	Shaft, 5/8" diameter, left hand thread, stainless steel	1
14	BAC-50	41080	Key, 3/16" x 3/16" x 1-1/4"	1
①	RK-FMC	52700	Repair kit for FMC series	-
②	RK-FMCSC	52706	Repair kit for FMC series with silicon cardide seal	-

How to order:
Specify Mfr Part Number
Example: 40160

Belt Driven Centrifugal Pumps

FMC-150
FMC-150-MAG-D

- Counterclockwise Rotation when facing shaft end.
- Stainless Steel Shaft and Wear Ring
- Chemical resistant thermoplastic, optional Cast Iron (CI), or optional Polypropylene (PI) Impeller
- Standard Carbon/Ceramic seal or optional Severe Duty Silicon Carbide Mechanical seal (SC)

SC CI PI BSP

1-1/2"	1-1/4"
SUCTION	DISCHARGE

Maximum Flow: 130 GPM (492 LPM)
Maximum Pressure: 130 PSI (9 BAR)
Maximum Power: 10 HP (7.5 KW)

ACE PUMPS

150 SERIES HIGH PERFORMANCE

FMC-150

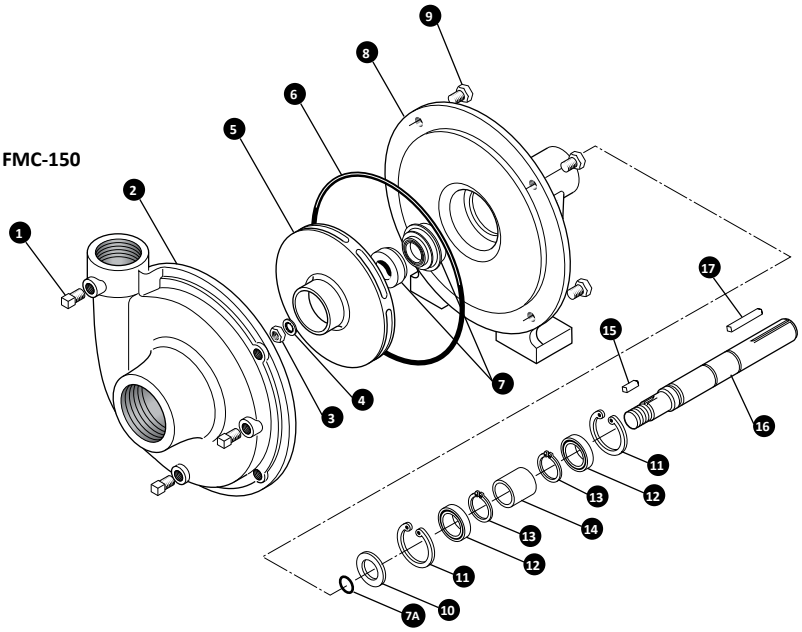

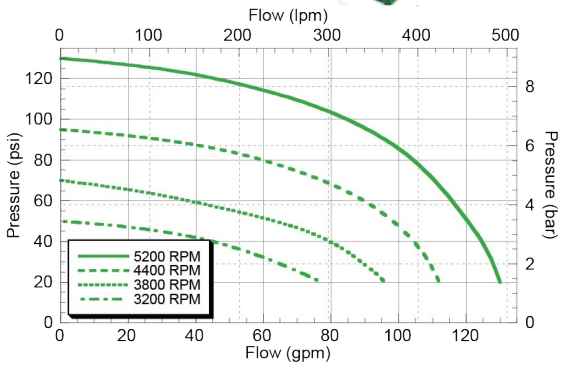

REF. #	MNF PART NO.	EDP #	DESCRIPTION	REQ.
1	BAC-53	41110	Pipe plug,1/8" NPT	4
1	41120	41120	Pipe plug,1/8" NPT, stainless steel (optional)	4
2	BAC-12-150	40255	Volute, 1-1/2" x 1-1/4", cast iron	1
3	BAC-23-A	40391	Nut, 3/8" NF Hex, cad plated locknut	1
3	BAC-23-B-SS	40393	Nut, 3/8" NF, stainless steel (standard on -SS models)	1
4①②	BAC-24-HYD-SS	40400	Washer, 3/8", stainless steel	1
4	BAC-24-B-SS	42702	Washer, 3/8", stainless steel, vibration proof (standard on -SS models)	1
5	BAC-26-150-P	40445	Impeller, Valox with keyway	1
5	BAC-26-150-CI	40446	Impeller, cast iron with keyway (optional)	1
5	BAC-26-150-PI	40448	Impeller, polypropylene, keyway (optional)	1
6①②	BAC-4-150	40015	O-ring for BAC-12-150 volute seal	1
7①	BAC-7V	40151	Seal, Viton mechanical seal (includes 40160 O-ring)	1
7①②	BAC-7SC	40152	Seal, Silicon carbide mechanical seal (includes 40160 O-ring)(optional)	1
7A①②	40160	40160	O-ring for BAC-6 shaft	1
8	BAC-14-150-F	40306	Mounting frame	1
9	40930	40930	Cap screw, 3/8" NC x 3/4" Hex head, stainless steel (optional)	4
9	40950	40950	Cap screw, 3/8" NC x 3/4" Hex head	4
10	BAC-54	41130	Slinger	1
11	BAC-33	40810	Snap ring, internal, BAC-14 mounting frame	2
12	BAC-37	40870	Bearing, BAC-6 driven shaft	2
13	BAC-32	40790	Snap ring, external, BAC-6 driven shaft	2
14	BAC-32-S	40795	Spacer for BAC-6 shaft	1
15	BACH-25	40420	Key, 1/8" x 1/8" x 1/2"	1
16	BAC-6-150/200-SS	40056	Shaft, 5/8" Driven shaft with keyway, stainless steel	1
17	BAC-50	41080	Key, 3/16" x 3/16" x 1-1/4"	1
①	RK-FMC-150	52710	Repair kit for FMC-150 series	-
②	RK-FMCSC-150	52711	Repair kit for FMC-150 series with silicon carbide shaft seal	-

How to order:
Specify Mfr Part Number
Example: 40160

Belt Driven Centrifugal Pumps

FMC-150-MAG-D

- Counterclockwise Rotation when facing shaft end.
- Stainless Steel Shaft and Wear Ring
- Chemical resistant thermoplastic, optional Cast Iron (CI), or optional Polypropylene (PI) Impeller
- Standard Carbon/Ceramic seal or optional Severe Duty Silicon Carbide Mechanical seal (SC)

SC CI PI BSP

1-1/2"	1-1/4"
SUCTION	DISCHARGE

Maximum Flow: 130 GPM (492 LPM)
Maximum Pressure: 130 PSI (9 BAR)
Maximum Power: 10 HP (7.5 KW)

ACE PUMPS

150 SERIES HIGH PERFORMANCE

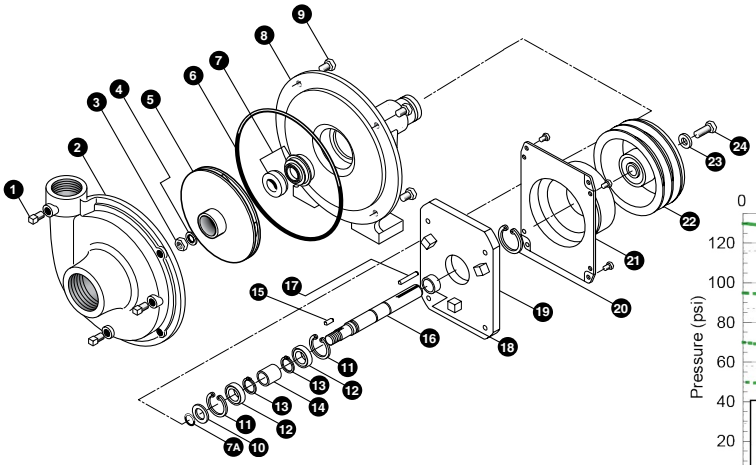

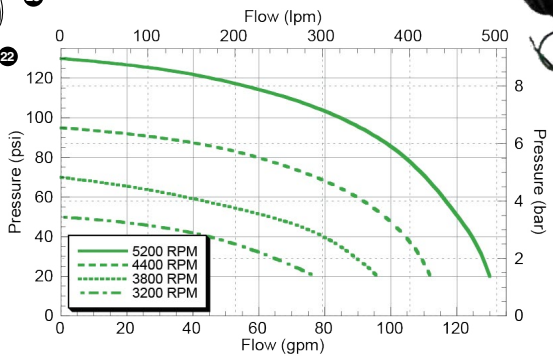

REF. #	MNF PART NO.	EDP #	DESCRIPTION	REQ.
1	BAC-53	41110	Pipe plug,1/8" NPT	4
1	41120	41120	Pipe plug,1/8" NPT, stainless steel (optional)	4
2	BAC-12-150	40255	Volute, 1-1/2" x 1-1/4", cast iron	1
3	BAC-23-A	40391	Nut, 3/8" NF Hex, cad plated locknut	1
3	BAC-23-A-SS	40392	Nut, 3/8" NF Hex, stainless steel locknut (optional)	1
4①②	BAC-24-HYD-SS	40400	Washer, 3/8", stainless steel	1
5	BAC-26-150-P	40446	Impeller, 5-1/2" dia., thermoplastic	1
5	BAC-26-150-CI	40445	Impeller, 5-1/2" dia., cast iron (optional)	1
6①②	BAC-4-150	40015	"O" Ring for BAC-12 volute seal	1
7①	BAC-7V	40151	Seal, Viton mechanical seal (includes 40160 "O" ring)	1
7②	BAC-7SC	40152	Seal, Silicon carbide mechanical seal (includes 40160 "O" Ring)(optional)	1
7A①②	40160	40160	"O" Ring for BAC-6 shaft	1
8	BAC-14-150-MIA	40308	Mounting frame, machined for idler arm	1
9	40930	40930	Cap screw, 3/8" NC x 3/4" Hex head, stainless steel (optional)	4
9	40950	40950	Cap screw, 3/8"NC x 3/4" Hex head	4
10	BAC-54	41130	Slinger	1
11	BAC-33	40810	Snap ring, internal, BAC-14 mounting frame	2
12	BAC-37	40870	Bearing, BAC-6 driven shaft	2
13	BAC-32	40790	Snap ring, external, BAC-6 driven shaft	2
14	BAC-32-S	40795	Spacer for BAC-6 shaft	1
15	BACH-25	40420	Key, 1/8" x 1/8" x 1/2"	1
16	BAC-6-150-D-SS	40076	Shaft, 5/8" Driven, -D clutch, stainless steel	1
17	BAC-50	41080	Key, 3/16" x 3/16" x 1-1/4"	1
18	41492	41492	Spacer, -D clutch	1
19	41491	41491	Adapter plate, -D clutch	1
20	BAC-36	40850	Snap ring, external, BAC-13 idler arm	1
21	41496	41496	Coil ring with 4 cap screws, - D clutch, 12 volt, DC activated	1
22	41497	41497	5" Pulley assy., -D clutch	1
23	41494	41494	Washer, -D clutch attachment	1
24	GE-60	42230	Cap Screw, 5/16" NF x 3/4", -D clutch attachment	1
①	RK-FMC-150	52710	Repair kit for FMC series	-
②	RK-FMCSC-150	52711	Repair kit for FMC series with silicon carbide shaft seal	-
#	41493	41493	Magnetic Clutch assembly, includes 41492, 41496, and 41497	-

How to order:
Specify Mfr Part Number
Example: 40160

Belt Driven Centrifugal Pumps

FMC-200
FMC-200-MAG-D
FMC-200SS-MAG-DX

- Counterclockwise Rotation when facing shaft end
- Stainless Steel Shaft and Wear Ring
- Chemical resistant thermoplastic, optional Cast Iron (CI), or optional Stainless Steel (SI) Impeller
- Standard Carbon/Ceramic seal or optional Severe Duty Silicon Carbide Mechanical seal (SC)
- 200SS model has 316 stainless steel wet end including impeller (SI), volute, and seal plate
- X option includes larger 3/4" (1.9 cm) diameter shaft and larger bearings for longer life

*See following page for part's breakdown information.

SC CI SI

2"	1-1/2"
SUCTION	DISCHARGE

Maximum Flow: 200 GPM (757 LPM)
Maximum Pressure: 120 PSI (8.3 BAR)
Maximum Power: 7.5 HP (5.6 KW)

ACE PUMPS
200 SERIES HIGH FLOW

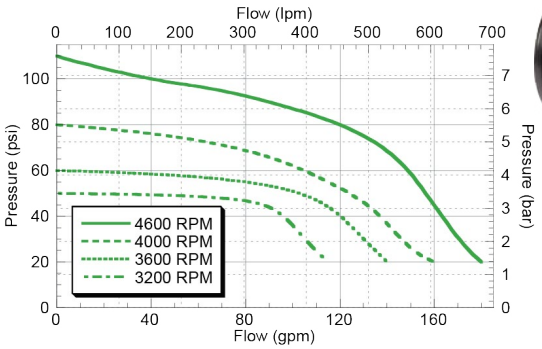

Pulley Ratio

To get the desired performance from an ACE Frame Mounted Pump, the proper speed ratio between the pump and drive source must be established. The following formula should be helpful:

$$\frac{\text{Pump RPM}}{\text{Driveshaft RPM}} = \frac{\text{Drive Pulley Diameter}}{\text{Pump Pulley Diameter}}$$

For example: To drive an FMC-150-MAG pump at 5000 RPM with a drive source RPM of 3600 and knowing that the clutch pulley diameter on the pump is 4.75" (12 CM), what should the diameter of the drive pulley be?

$$\frac{5000\ \text{RPM}}{3600\ \text{RPM}} = \frac{\text{Drive Pulley Diameter}}{4.75''\ (12\ \text{CM})}$$

ENGLISH
1) 5000 x 4.75 = 23750
2) 23750 ÷ 3600 = 6.59

METRIC
1) 5000 x 12 = 60000
2) 60000 ÷ 3600 = 16.67

The drive pulley diameter, when rounded off should be 6.5" (17 CM).

Belt Alignment and Tension

Proper belt alignment and belt tension will prevent premature bearing failure in the clutch and/or the pump. Use a straight edge held on the faces of the pulleys to check alignment. To provide proper belt tension, lay the straight edge on the tops of both pulleys as shown. Use mild force to deflect the belt as shown. Use a ruler to measure the amount of deflection. Proper tension will allow 1/2" (1 CM) of deflection for each 12" (30 CM) of distance between the pulleys.

For example: If the distance between the pulleys is 3' (90 CM), the deflection should be 1 1/2" (3 CM).

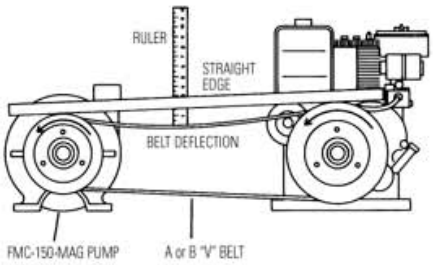

Continued on next Page

Belt Driven Centrifugal Pumps

FMC-200

ACE PUMPS
200 SERIES HIGH FLOW

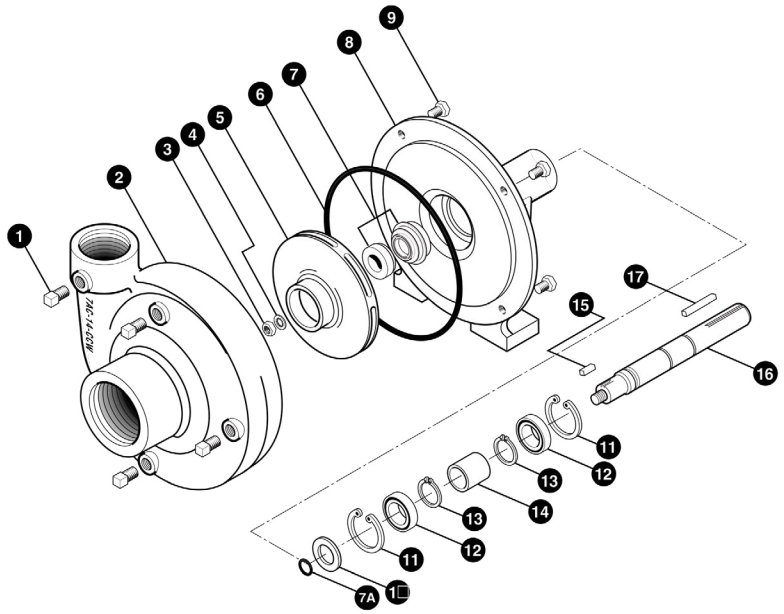

REF. #	MNF PART NO.	EDP #	DESCRIPTION	REQ.
1	BAC-53	41110	Pipe plug,1/8” NPT	4
1	41120	41120	Pipe plug,1/8” NPT, stainless steel (optional)	4
2	7AC-14-CCW	41526	Volute, 2” x 1-1/2”, cast iron	1
3	BAC-23-A	40391	Nut, 3/8” NF Hex, cad plated locknut	1
3	BAC-23-B-SS	40393	Nut, 3/8” NF, stainless steel (standard on -SS models)	1
4①②	BAC-24-HYD-SS	40400	Washer, 3/8”, stainless steel	1
4	BAC-24-B-SS	42702	Washer, 3/8”, stainless steel, vibration proof (standard on -SS models)	1
5	BAC-26-200-P	40434	Impeller, 5-1/2” dia., extended keyway, thermoplastic, effective Dec. ‘98	1
5	BAC-26-200-CI	40433	Impeller, 5-1/2” dia., extended keyway, cast iron, effective Dec. ‘98 (optional)	1
5	BAC-26-200-SS	40436	Impeller,with extended keyway, 316 stainless steel (optional)	1
5	BAC-26-HYD-200-CI	41525	Impeller, 5-1/2” dia., with keyway, cast iron, prior Dec. ‘98	1
6①②	BAC-4A	40005	“O” Ring for BAC-12 volute seal, effective Apr. ‘96	1
6	BAC-4	40010	Gasket, 4 hole	1
7①	BAC-7V	40151	Seal, Viton mechanical seal (includes 40160 “O” Ring)	1
7②	BAC-7SC	40152	Seal, Silicon carbide mechanical seal (includes 40160 “O”Ring) (optional)	1
7A①②	40160	40160	“O” Ring for BAC-6 shaft	1
8	BAC-14-F	40310	Mounting frame	1
9	40930	40930	Cap screw, 3/8” NC x 3/4” Hex head, stainless steel (optional)	4
9	40950	40950	Cap screw, 3/8” NC x 3/4” Hex head	4
10	BAC-54	41130	Slinger	1
11	BAC-33	40810	Snap ring, internal, BAC-14 mounting frame	2
12	BAC-37	40870	Bearing, BAC-6 driven shaft	2
13	BAC-32	40790	Snap ring, external, BAC-6 driven shaft	2
14	BAC-32-S	40795	Spacer for BAC-6 shaft	1
15	BAC-25	40425	Key, 1/8” x 1/8” x 13/16”, extended keyway, effective Dec. ‘98	1
15	BACH-25	40420	Key, 1/8” x 1/8” x 1/2”	1
16	BAC-6-150/200-SS	40056	Shaft, 5/8” Driven shaft with keyway, stainless steel	1
16	BAC-6-200-SS	40057	Shaft, 5/8” Driven ,extended keyway, stainless steel, effective Dec. ‘98	1
17	BAC-50	41080	Key, 3/16” x 3/16” x 1-1/4”	1
①	RK-FMC	52700	Repair kit for FMC series	-
②	RK-FMCSC	52706	Repair kit for FMC series with silicon carbide seal	-

How to order:
Specify Mfr Part Number
Example: BAC-25

Westward Parts can source many other special order items that are not listed in this catalogue, please visit our website at westwardparts.com or call us directly at 1-888-937-7278. Our team will help you find what you need.
The product images shown are for illustration purposes only and may not be an exact representation of the product.

Continued on next Page

Belt Driven Centrifugal Pumps

FMC-200-MAG-D / FMC-200SS-MAG-DX - Parts List

ACE PUMPS
200 SERIES HIGH FLOW

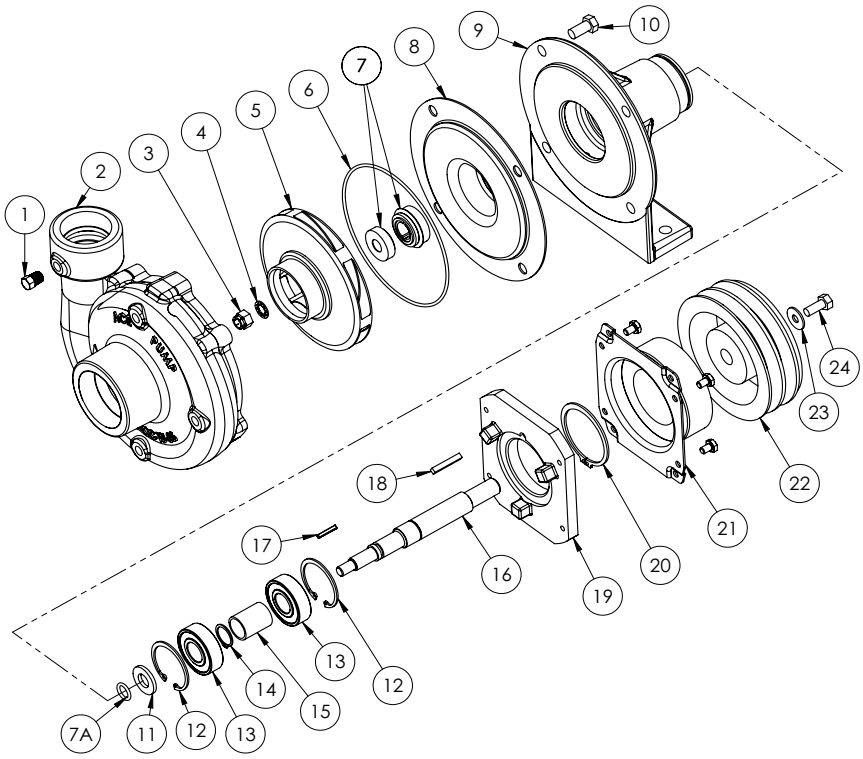

REF. #	MNF PART NO.	EDP #	DESCRIPTION	REQ.
1	41120	41120	Pipe plug,1/8” NPT, stainless steel	4
2	7AC-14-CCW-SS	41531	Volute, 2” x 1-1/2”, stainless steel	1
3	BAC-23-A-SS	40392	Nut, 3/8” NF, stainless steel	1
4	BAC-24-HYD-SS	40400	Washer, 3/8”, stainless steel	1
5	BAC-26-200-SS	40436	Impeller, with extended keyway, stainless steel	1
6①②	BAC-4A	40005	“O” Ring, BAC-12 volute seal	1
7①	BAC-7V	40151	Seal, Viton mechanical seal (includes 40160 “O” Ring)	1
7②	BAC-7SC	40152	Seal, Silicon carbide mechanical seal (includes 40160 “O”Ring) (optional)	1
7A①②	40160	40160	“O” Ring,BAC-6X shaft	1
8	BAC-14-LIN	40336	Liner; mounting frame, stainless steel	1
9	BAC-14X-MIA-LIN	40296	Mounting frame, -X series, machined for idler arm, (machined for liner)	1
10	40930	40930	Cap screw, 3/8” NC x 3/4” Hex head, stainless steel	4
11	BAC-54	41130	Slinger	1
12	BAC-33X	40812	Snap ring, internal, BAC-14X mounting frame	2
13	BAC-37X	40872	Bearing, BAC-6X driven shaft	2
14	BAC-32X	40792	Snap ring, external, BAC-6X driven shaft	1
15	BAC-32X-S	40796	Spacer for BAC-6X shaft	1
17	BAC-25	40425	Key, 1/8” x 1/8” x 13/16”, with keyway	1
16	BAC-6X-200-D-SS	40059	Shaft, heavy duty, -X series driven shaft with keyway	1
18	BAC-50	41080	Key, 3/16” x 3/16” x 1-1/4”	1
19	41473	41473	Adapter plate, -X series, -D clutch	1
20	BAC-36X	40855	Snap ring, external	1
21	41496	41496	Coil ring with 4 cap screws, -D clutch, 12 volt DC activated	1
22	41497	41497	Pulley assembly, 5” diameter, -D clutch	1
23	41494	41494	Washer, -D clutch attachment	1
24	GE-60	42230	Cap Screw, 5/16” NF x 3/4”, -D clutch attachment	1
①	RK-FMC	52700	Repair kit for FMC series	-
②	RK-FMCSC	52706	Repair kit for FMC series with silicon carbide seal	-
#	41493	41493	Magnetic Clutch assembly, includes 41496 and 41497	-

How to order:
Specify Mfr Part Number
Example: 40160

Westward Parts can source many other special order items that are not listed in this catalogue, please visit our website at westwardparts.com or call us directly at 1-888-937-7278. Our team will help you find what you need.
The product images shown are for illustration purposes only and may not be an exact representation of the product.

Belt Driven Centrifugal Pumps

Clockwise Rotation

FMC-CW-150
FMC-CW-150-MAG-D
FMC-CW-150-MAG-DX3

1-1/2"	1-1/4"
SUCTION	DISCHARGE

Maximum Flow: 80 GPM (303 LPM)
Maximum Pressure: 120 PSI (8.3 BAR)
Maximum Power: 4.7 HP (3.5 KW)

ACE PUMPS
150 SERIES
HIGH PERFORMANCE

- Clockwise Rotation when facing shaft end
- Stainless Steel Shaft and Wear Ring
- Chemical resistant thermoplastic or optional Cast Iron Impeller (CI)
- Standard Carbon/Ceramic seal or optional. Severe Duty Silicon Carbide Mechanical seal (SC)
- **MAG-D models** equipped with heavy duty 12V clutch
- X option includes larger 3/4" (1.9 cm) diameter shaft and larger bearings for longer life
- **X3 model** has 3 1/2" (8.89 CM) spacing on mounting base. All other models have 5 1/4" (13.34 CM)
- **DX3 model** for Spra-Coupe® Models: 3430, 3440, 3630,

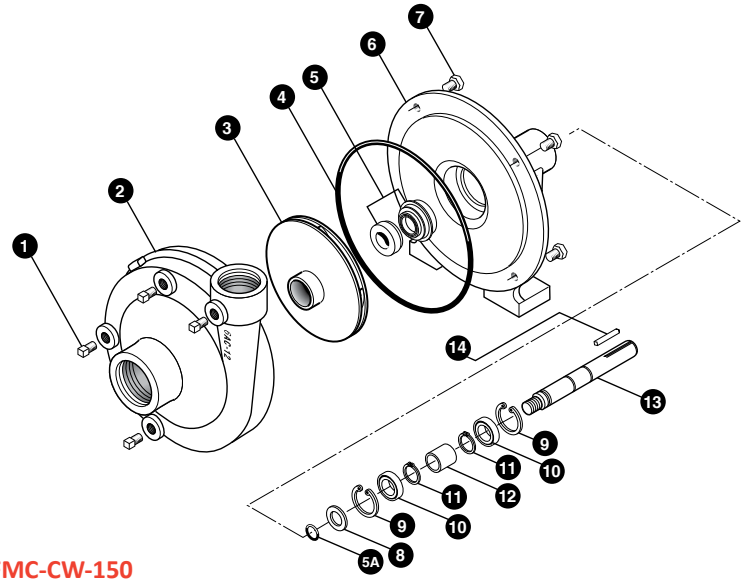

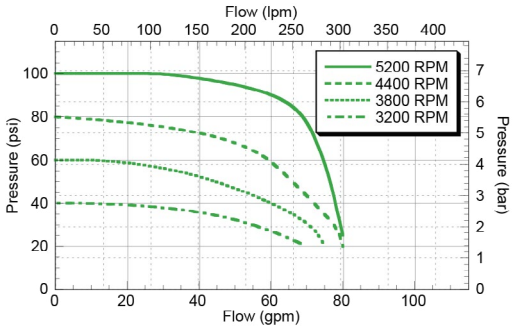

FMC-CW-150

REF. #	MNF PART NO.	EDP #	DESCRIPTION	REQ.
1	BAC-53	41110	Pipe plug,1/8" NPT	4
1	41120	41120	Pipe plug,1/8" NPT, stainless steel (optional)	4
2	6AC-12	30130	Volute, 1-1/2" x 1-1/4",clockwise rotation, cast iron	1
3	BAC-26-CW-150-P	41510	Impeller, 5-1/2" dia., right hand NF thread, thermoplastic	1
3	BAC-26-CW-150-CI	41515	Impeller, 5-1/2" dia., right hand NF thread, cast iron (optional)	1
4①②	BAC-4A	40005	"O" Ring for BAC-12 volute seal, effective Apr. '96	1
4	BAC-4	40010	Gasket, 4 hole	1
5①	BAC-7V	40151	Seal, Viton mechanical seal (includes 40160 "O" ring)	1
5②	BAC-7SC	40152	Seal, Silicon carbide mechanical seal (includes 40160 "O" Ring)(optional)	1
5A①②	40160	40160	"O" Ring for BAC-6 shaft	1
6	BAC-14-F	40310	Mounting frame	1
7	40930	40930	Cap screw, 3/8" NC x 3/4" Hex head, stainless steel (optional)	4
7	40950	40950	Cap screw, 3/8"NC x 3/4" Hex head	4
8	BAC-54	41130	Slinger	1
9	BAC-33	40810	Snap ring, internal, BAC-14 mounting frame	2
10	BAC-37	40870	Bearing, BAC-6 driven shaft	2
11	BAC-32	40790	Snap ring, external, BAC-6 driven shaft	2
12	BAC-32-S	40795	Spacer for BAC-6 shaft	1
13	BAC-6-CW-SS	41500	Shaft, 5/8" Driven, right hand NF thread, stainless steel	1
14	BAC-50	41080	Key, 3/16" x 3/16" x 1 1/4"	1
①	RK-FMC	52700	Repair kit for FMC series	-
②	RK-FMCSC	50706	Repair kit for FMC series with silicon carbide shaft seal	-

How to order:
Specify Mfr Part Number
Example: 41120

Continued on next Page

Belt Driven Centrifugal Pumps

FMC-CW-150-MAG-D

ACE PUMPS

150 SERIES HIGH PERFORMANCE

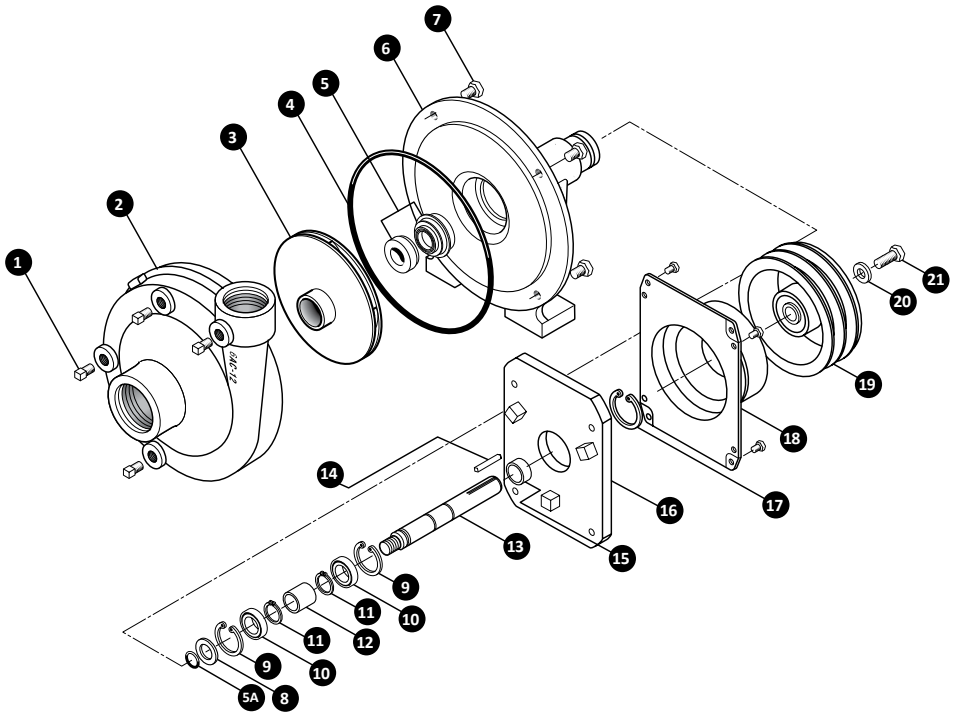

REF. #	MNF PART NO.	EDP #	DESCRIPTION	REQ.
1	41110	41110	Pipe plug,1/8" NPT	4
1	41120	41120	Pipe plug,1/8" NPT, stainless steel (optional)	4
2	6AC-12	30130	Volute, 1-1/2" x 1-1/4",clockwise rotation, cast iron	1
3	BAC-26-CW-150-P	41510	Impeller, 5-1/2" dia., right hand NF thread, thermoplastic	1
3	BAC-26-CW-150-CI	41515	Impeller, 5-1/2" dia., right hand NF thread, cast iron (optional)	1
*4	BAC-4A	40005	"O" Ring for BAC-12 volute seal, effective Apr. '96	1
*4	BAC-4	40010	Gasket, 4 hole	1
*5	BAC-7V	40151	Seal, Viton mechanical seal (includes 40160 "O" ring)	1
5	BAC-7SC	40152	Seal, Silicon carbide mechanical seal (includes 40160 "O" Ring)(optional)	1
5A	40160	40160	"O" Ring for BAC-6 shaft	1
6	BAC-14-MIA	40290	Mounting frame, machined for idler arm	1
7	40930	40930	Cap screw, 3/8" NC x 3/4" Hex head, stainless steel (optional)	4
7	40950	40950	Cap screw, 3/8"NC x 3/4" Hex head	4
8	BAC-54	41130	Slinger	1
9	BAC-33	40810	Snap ring, internal, BAC-14 mounting frame	2
10	BAC-37	40870	Bearing, BAC-6 driven shaft	2
11	BAC-32	40790	Snap ring, external, BAC-6 driven shaft	2
12	BAC-32-S	40795	Spacer for BAC-6 shaft	1
13	BAC-6-CW-D-SS	41501	Shaft, 5/8" Driven, -D clutch, right hand NF thread, stainless steel	1
14	BAC-50	41080	Key, 3/16" x 3/16" x 1-1/4"	1
15	41492	41492	Spacer, -D clutch	1
16	41491	41491	Adapter plate, -D clutch	1
17	BAC-36	40850	Snap ring, external, BAC-13 idler arm	1
18	41496	41496	Coil ring with 4 cap screws, - D clutch, 12 volt, DC activated	1
19	41497	41497	5" Pulley assy., -D clutch	1
20	41494	41494	Washer, -D clutch attachment	1
21	GE-60	42230	Cap Screw, 5/16" NF x 3/4", -D clutch attachment	1
#	RK-FMC	052700	Repair kit for FMC series	-
#	41493	41493	Magnetic Clutch assembly, includes 41492, 41496, and 41497	-

* Items included in pump repair kit.

How to order:
Specify Mfr Part Number
Example: BAC-32

Continued on next Page

Belt Driven Centrifugal Pumps

FMC-CW-150-MAG-DX3

ACE PUMPS

150 SERIES HIGH PERFORMANCE

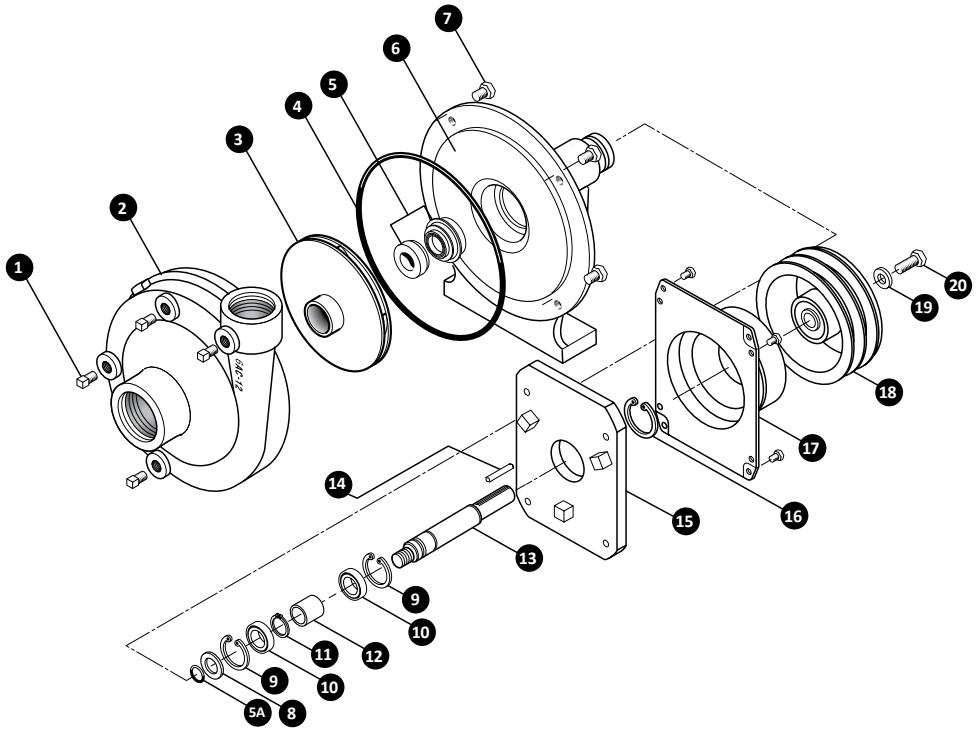

REF. #	MNF PART NO.	EDP #	DESCRIPTION	REQ.
1	11104	4 1110	Pipe plug,1/8" NPT	4
2	BAC-126	3 0130	Volute, 1-1/2" x 1-1/4",clockwise rotation, cast iron	1
3	BAC-26-CW-B150-P	4 1510	Impeller, 5-1/2" dia., right hand NF thread, thermoplastic	1
4①②	BAC-4AB	4 0005	"O" Ring for BAC-12 volute seal, effective Apr. '96	1
5①	BAC-7VB	40151	Seal, mechanical seal, Viton (includes 40160 "O" Ring)	1
5②	BAC-7SC	40152	Seal, Silicon carbide mechanical seal (includes 40160 "O" Ring)(optional)	1
5A①②	40160	40160	"O" Ring for BAC-6 shaft	1
6	BAC-14X3-MIA	40316	Mounting frame, -X series machined for idler arm	1
7	40950	40950	Cap screw, 3/8"NC x 3/4" Hex head	4
8	BAC-54	41130	Slinger	1
9	BAC-33X	4 0812	Snap ring, internal, BAC-14 mounting frame	2
10	BAC-37X	4 0872	Bearing, BAC-6 driven shaft	2
11	BAC-32X	4 0792	Snap ring, external, BAC-6 driven shaft	1
12	BAC-32X-S	4 0796	Spacer for BAC-6 shaft	1
13	BAC-6X-CW-D-SS	41507	Shaft, 5/8" Driven, -D clutch, right hand NF thread, stainless steel	1
14	BAC-50	41080	Key, 3/16" x 3/16" x 1-1/4"	1
15	41473	41473	Adapter plate, -D clutch, X Series	1
16	BAC-36X	40855	Snap ring, external, X series pump	1
17	41496	41496	Coil ring with 4 cap screws, - D clutch, 12 volt, DC activated	1
18	41497	4 1497	5" Pulley assy., -D clutch	1
19	41494	4 1494	Washer, -D clutch attachment	1
20	GE-60	4 2230	Cap Screw, 5/16" NF x 3/4", -D clutch attachment	1
①	RK-FMC	5 2700	Repair kit for FMC series with BAC-7V shaft seal	-
②	RK-FMCSC	5 2706	Repair kit for FMC series with BAC-7SC shaft seal	-
#	41493	41493	Magnetic Clutch assembly, includes 41492, 41496, and 41497	-

How to order:
Specify Mfr Part Number
Example: 41110

Application Information

How do you plan to drive the pump?

PENTAIR
HYPRO® · SHURFLO®

If your power source is:		Roller	Centrifugal and Transfer	Diaphragm	Piston/Plunger
540 rpm PTO	direct coupled:	X		X	X
	through gear drive:		X		
	through belt/pulley:		X		
1000 rpm PTO	direct coupled:	X			
	through gear drive:		X		
	through belt/pulley:		X		
Hydraulic Motor		X	X	X	X
12 Volt DC Motor		X		X	X
Gas Engine	direct coupled:	X	X		
	through gear reduction:	X		X	X
	through belt/pulley:	X	X	X	X
Electric Motor	direct coupled:	X	X		
	through belt/pulley:	X	X	X	X

Centrifugal Pumps

- Commonly used with self-propelled sprayers, large-trailed sprayers, and construction equipment
  - Material Options: Cast Iron, Polypropylene, 316 Stainless Steel
  - Pressure Range: 0-150 psi (0- 10 bar)
  - Flow Range: 0-1078 gpm (0-4080 lpm)

Transfer Pumps

- Commonly used with tender trailers and fluid transfer stations
  - Material Options: Polypropylene, Aluminum, Cast Iron
  - Pressure Range: 0-55 psi (0- 3.8 bar)
  - Flow Range: 0-460 gpm (0-1740 lpm)

Shurflo Diaphragm Pumps

- Commonly used with ATV sprayers and nutrient application systems
  - Material Options: Polypropylene, Nylon
  - Pressure Range: 0-150 psi (0- 10 bar)
  - Flow Range: 0-5 gpm (0-19 lpm)

Piston & Plunger Pumps

- Commonly used with pressure-cleaning and car wash systems
  - Material Options: Cast Iron, 316 Stainless Steel, Brass
  - Pressure Range: 0-3600 psi (0-248 bar)
  - Flow Range: 0-45 gpm (0-170 lpm)

Roller Pumps

- Commonly used with 3-point sprayers, pest control, and de-icing skids
  - Material Options: Cast Iron, Ni-Resist, Silver Series XL
  - Pressure Range: 0-300 psi (0- 20 bar)
  - Flow Range: 0-60 gpm (0-227 lpm)

Diaphragm Pumps

- Commonly used with nutrient application systems, fruit & vegetable sprayers, and pressure cleaning system
  - Material Options: Aluminum, Brass, Polypropylene
  - Pressure Range: 0-725 psi (0- 50 bar)
  - Flow Range: 0-66 gpm (0-250 lpm)

Specialty Pumps

- Versa-Twin: transferring liquids in carpet cleaning, pest control, and turf spraying
- Noryl: bulk transfer of fertilizer and agricultural chemicals
- Aqua-Tiger: general pumping applications where a flooded intake is provided

System Hook-Ups

Centrifugal Pumps

PENTAIR
HYPRO® · SHURFLO®

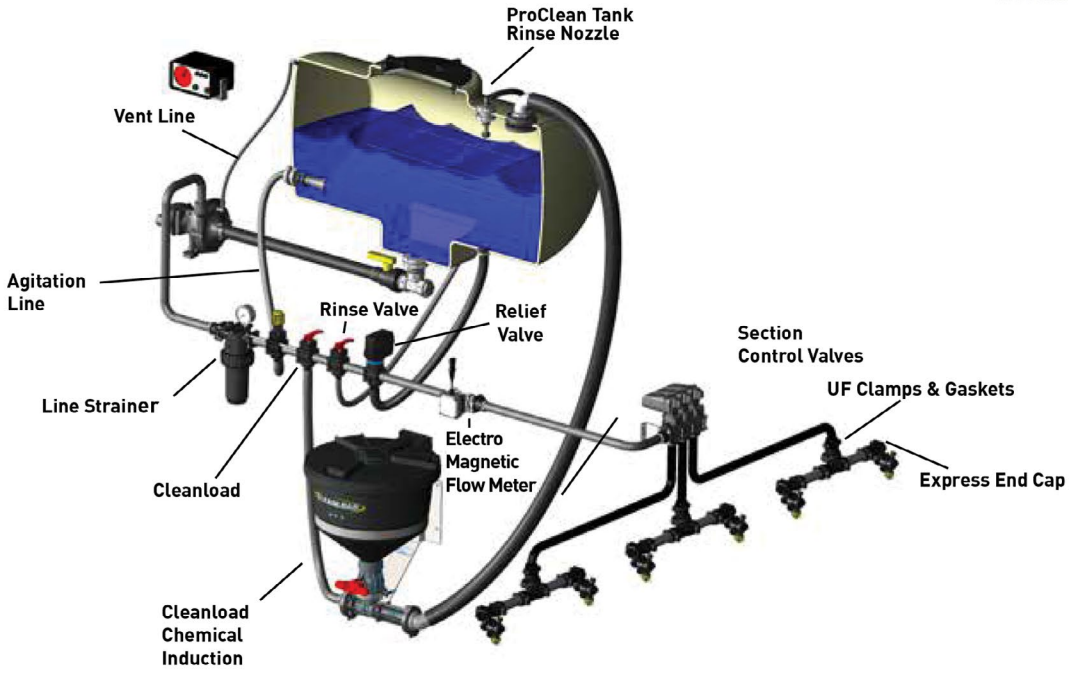

Roller, Diaphragm Pumps

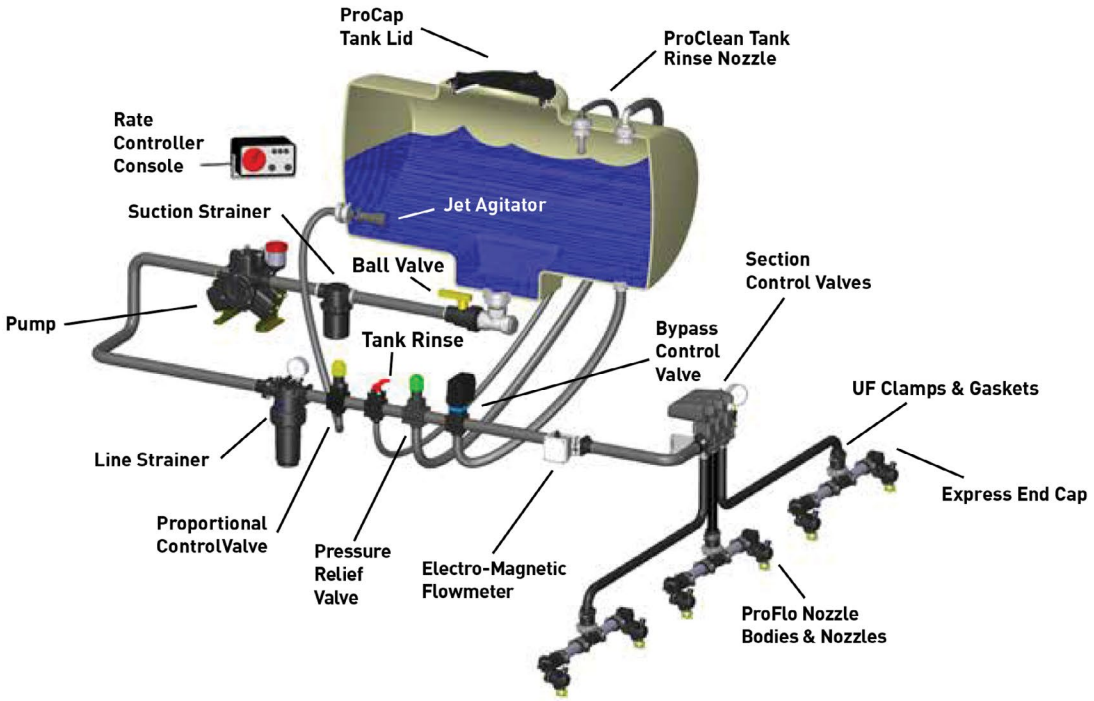

System Hook-Ups

Diaphragm Pumps, High Pressure Applications

PENTAIR
HYPRO® · SHURFLO®

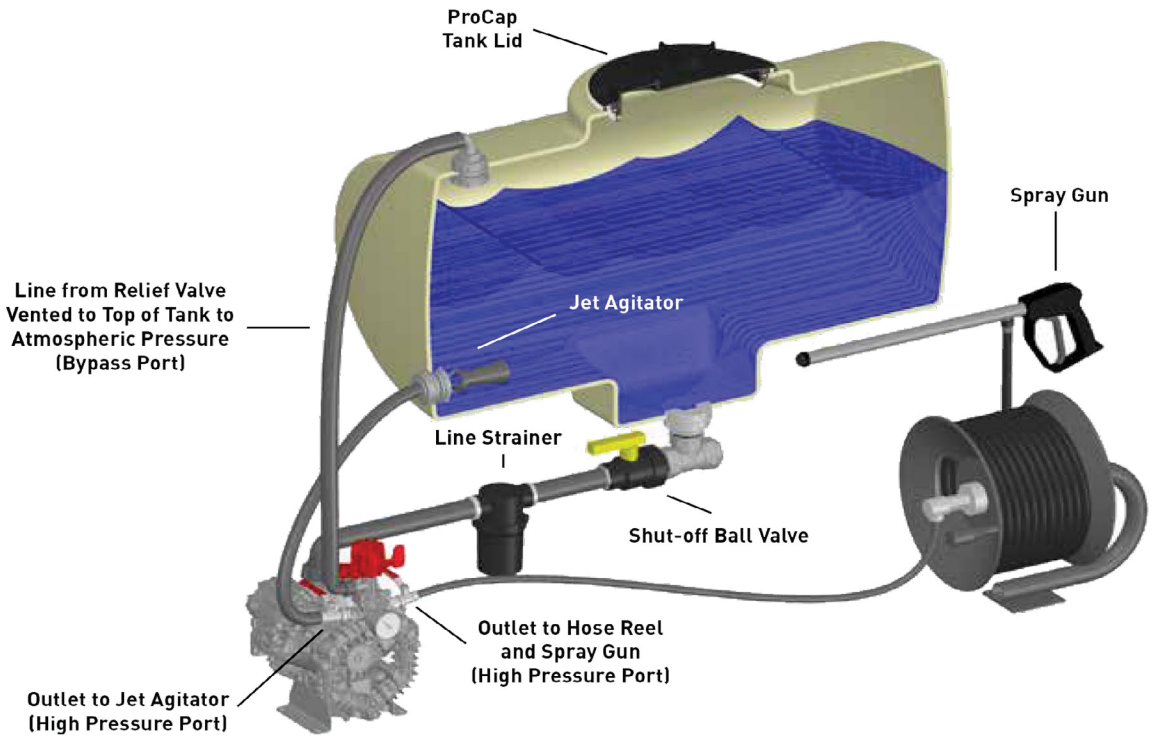

Small Twin® Piston Pumps

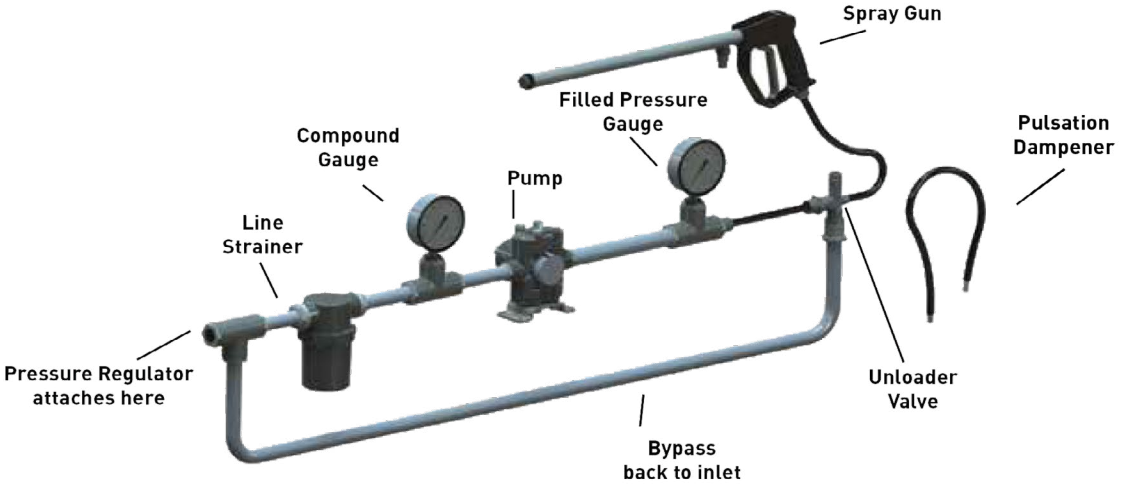

Westward has the part!
YouTube
1-888-937-7278

Centrifugal Pumps

Pedestal Mount, Clutch-Driven, Polypropylene

Series 9260P

PENTAIR
HYPRO® · SHURFLO®

Features:

- Pedestal mount with DC clutch drive
- Port sizes: 1-1⁄2" NPT inlet, 1-1⁄4" NPT outlet
- Max. fluid temperature: 140°F/60°C
- Housing: Polypropylene
- Impeller: Polypropylene
- Pump shaft rotation: Counter clockwise 9260P, when looking at the shaft end; 9260P-R is clockwise
- Pump seals: Viton®/ceramic standard; Life Guard silicon carbide (B) available
- Life Guard seals are the industry standard on OEM equipment
- Clutch: 12 volt with 5-1⁄2" (140 mm) diameter A-section pulley (part # 2526-0011)
- Weight: 19 lbs./8.6 kg

Upgrade Options:

- Increase dry-run and abrasive resistance with Life Guard Seals

– Life Guard seals are the OEM standard

Mfr Part #	Max GPM	Max LPM	Max PSI	Max BAR	Max RPM	Rotation
9260P	100	379	82	5.7	4200	CCW
9260P-R	100	379	82	5.7	4200	CW
3430-0333	Seal and o-ring repair kit					
3430-0590	Life Guard silicon carbide seal kit					

Life Guard silicon carbide seal - Add suffix "B" (i.e.: 9260P-B)

9260P, 9260P-R

U.S. Units

RPM	10 PSI		20 PSI		30 PSI		40 PSI		50 PSI		60 PSI		70 PSI		80 PSI	
	GPM	HP	GPM	HP	GPM	HP	GPM	HP	GPM	HP	GPM	HP	GPM	HP	GPM	HP
2400	55	1.5	49	1.4	32	1.1										
3600	89	4.4	87	4.3	81	4.1	71	3.9	58	3.6	37	3.1				
4200	100	6.7	100	6.6	97	6.5	90	6.3	82	6.0	71	5.7	60	5.2	39	4.4

How to order:
Specify Mfr Part #
Example: 9303C-HM1C

Westward Parts can source many other special order items that are not listed in this catalogue, please visit our website at westwardparts.com or call us directly at 1-888-937-7278. Our team will help you find what you need.
The product images shown are for illustration purposes only and may not be an exact representation of the product.

Centrifugal Pumps

Pedestal Mount, Clutch-Driven, Cast Iron & Stainless Steel

Series 9263C-C and 9263S-C

PENTAIR
HYPRO® · SHURFLO®

Features:

- Available in cast iron and 316 stainless steel for extended pump life. Pedestal mount with DC clutch drive. Double "A" groove pulley (5"/125 mm diameter)
- Port sizes: 1-1/2" NPT inlet, 1-1/4" NPT outlet (BSP available on 9263C). 220 x 200 universal flange available (U)
- Stainless steel models now available with universal flanges
- Max. fluid temperature: 140°F/60°C. Impeller: Nylon (standard in cast iron); polypropylene (standard in stainless steel); GTX available
- Pump seals: Cast Iron models – Viton®/ceramic standard; Life Guard silicon carbide (B) available; Stainless Steel models – Life Guard silicon carbide standard. Life Guard seals are the industry standard on OEM equipment
- Amp draw: 45 watts at 12 volts
- Weight: 23 lbs./10.5 kg

Upgrade Options:

- Increase dry-run and abrasive resistance with Life Guard Seals

– Life Guard seals are the OEM standard

- Extend pump life with Stainess Steel

– Fact: Chemical corrosion, pump cavitation, and abrasive wear are key factors in pump life

– 316 Stainless Steel pumps provide superior chemical corrosion resistance, while maintaining material strength to prolong the life against abrasive wear

– 316 Stainless Steel resists cavitation pitting of pumps, extending the wear life

– Drop in replacements for cast iron pumps

For Flanged Connections You Will Also Need:
Universal Flange Gasket. Universal Flange Clamp

Mfr Part #	Max GPM	Max LPM	Max PSI	Max BAR	Max RPM	Rotation
9263C-C † (BSP Version - 9263C-BT)	140	530	114	7.9	5000	CCW*
9263C-CR	140	530	114	7.9	5000	CW*
9263S-C †	140	530	114	7.9	5000	CCW*
9263S-CR	140	530	114	7.9	5000	CW*
3430-0332	Seal and o-ring repair kit					
3430-0589	Life Guard silicon carbide seal kit					

† Universal Flange (220 x 200) - Add Suffix "U" (i.e.: 9263C-C-U)
Life Guard silicon carbide seal - Add suffix "B" (i.e.: 9263C-CB)
*CCW (counterclockwise) CW (clockwise) are determined when looking at the shaft end.

9263C-C, 9263S-C, 9263C-CR, 9263S-CR, 9263C-C-U, 9263S-C-U

U.S. Units

RPM	10 PSI		20 PSI		40 PSI		60 PSI		80 PSI		100 PSI	
	GPM	HP	GPM	HP	GPM	HP	GPM	HP	GPM	HP	GPM	HP
2400	80	1.9	65	1.8								
3600	105	5.3	105	5.3	92	5.0	50	3.7				
4200	122	8.2	120	7.9	115	7.7	98	7.1	56	5.3		
5000	140	12.6	140	12.6	138	12.6	130	12.2	118	11.6	88	9.9

How to order:
Specify c Part #
Example: 9303C-HM1C

Westward Parts can source many other special order items that are not listed in this catalogue, please visit our website at westwardparts.com or call us directly at 1-888-937-7278. Our team will help you find what you need.
The product images shown are for illustration purposes only and may not be an exact representation of the product.

Centrifugal Pumps

Hydraulically-Driven, Cast Iron & Stainless Steel

PENTAIR
HYPRO® · SHURFLO®

9303C & 9303S Series

Features:

- Available in cast iron and 316 stainless steel for extended pump life
- Hydraulic motor drive (for open center, closed center and load-sensing systems)
- Port sizes: 1-1⁄2" NPT inlet, 1-1⁄4" NPT outlet
- 220 x 200 universal flange available (U)
- Max. fluid temperature: 140°F/60°C
- Impeller: Cast Iron models – Nylon; (GTX available)
- Stainless Steel models – Polypropylene
- Motor: internal gear gerotor
- Hydraulic ports: 1⁄2" NPT inlet, 3⁄4" NPT outlet
- Pump seals: Cast Iron models – Viton®/ceramic standard; Life Guard silicon carbide (B) available;
- Stainless Steel models – Life Guard silicon carbide standard
- Life Guard seals are the industry standard on OEM equipment
- Hydraulic motor seal: double-lip Teflon® and case drain available
- Max. motor psi: 3000 (bar: 207)
- Stainless steel models now available with universal flanges
- Weight: 26 lbs./11.8 kg

Upgrade Options:

- Increase dry-run and abrasive resistance with Life Guard Seals

– Life Guard seals are the OEM standard

- Extend pump life with Stainess Steel

– Fact: Chemical corrosion, pump cavitation, and abrasive wear are key factors in pump life

– 316 Stainless Steel pumps provide superior chemical corrosion resistance, while maintaining material strength to prolong the life against abrasive wear

– 316 Stainless Steel resists cavitation pitting of pumps, extending the wear life

– Drop in replacements for cast iron pumps

For Flanged Connections You Will Also Need:
- Universal Flange Gasket
- Universal Flange Clamp

Mfr Part #	Max GPM	Max LPM	Max PSI	Max BAR	Max Hyd. GPM	Max Hyd. LPM	Hydraulic Selection System
9303C-HM1C	114	432)	130	9.0	13	49.2	Open/Closed
9303C-HM2C	97	367	95	6.5	6	22.7	Open/Closed
9303C-HM3C	125	473	98	6.8	24	90.8	Open/Closed
9303C-HM4C	115	435	93	6.4	7	26.5	Open/Closed
9303C-HM5C	147	556	145	10.0	16	60.6	Open/Closed
9303S-HM1C	114	432)	130	9.0	13	49.2	Open/Closed
9303S-HM2C	97	367	95	6.5	6	22.7	Open/Closed
9303S-HM3C	125	473	98	6.8	24	90.8	Open/Closed
9303S-HM4C	115	435	93	6.4	7	26.5	Open/Closed
9303S-HM5C	147	556	145	10.0	16	60.6	Open/Closed
3430-0332	Seal and o-ring repair kit						
3430-0589	Life Guard silicon carbide seal kit						

Universal Flange (220 x 200) - Add suffix "U" (i.e.: 9303C-HM3C-U)
Life Guard silicon carbide seal - Add suffix "B" (i.e.: 9303C-HM1C-B)

How to order:
Specify Mfr Part #
Example: 9303C-HM1C

Westward Parts can source many other special order items that are not listed in this catalogue, please visit our website at westwardparts.com or call us directly at 1-888-937-7278. Our team will help you find what you need.
The product images shown are for illustration purposes only and may not be an exact representation of the product.

Continued on next Page

Centrifugal Pumps

Hydraulically-Driven, Cast Iron & Stainless Steel - 9303C & 9303S SERIES

PENTAIR
HYPRO® · SHURFLO®

9303C-HM1C, 9303S-HM1C

U.S. Units

Hyd. Flow GPM	GPM at 20 PSI	GPM at 30 PSI	GPM at 40 PSI	GPM at 50 PSI	GPM at 60 PSI	GPM at 70 PSI	GPM at 80 PSI	GPM at 90 PSI	GPM at 100 PSI	GPM at 110 PSI	GPM at 120 PSI
11	104	101	96	90	82	71	60	47	31		
12	110	109	107	105	101	92	81	67	53	36	9
13	112	111	109	107	104	102	96	85	76	63	33

9303C-HM2C, 9303S-HM2C

U.S. Units

Hyd. Flow GPM	GPM at 10 PSI	GPM at 20 PSI	GPM at 30 PSI	GPM at 40 PSI	GPM at 50 PSI	GPM at 60 PSI	GPM at 70 PSI	GPM at 80 PSI	GPM at 90 PSI
4	70	60	45	25					
5	83	74	65	50	37	22	4		
6	94	86	80	72	62	50	37	22	7

9303C-HM3C, 9303S-HM3C

U.S. Units

Hyd. Flow GPM	GPM at 10 PSI	GPM at 20 PSI	GPM at 30 PSI	GPM at 40 PSI	GPM at 50 PSI	GPM at 60 PSI	GPM at 70 PSI	GPM at 80 PSI	GPM at 90 PSI
15	100	92	83	69	47				
18	116	114	108	100	90	76	55	33	
20	125	123	120	114	107	96	85	71	50

9303C-HM4C, 9303S-HM4C

U.S. Units

Hyd. Flow GPM	GPM at 10 PSI	GPM at 20 PSI	GPM at 30 PSI	GPM at 40 PSI	GPM at 50 PSI	GPM at 60 PSI	GPM at 70 PSI	GPM at 80 PSI	GPM at 90 PSI
5	84	76	66	52	34				
6	97	92	86	78	67	50	25		
7	110	104	98	91	82	69	55	38	14

9303C-HM5C, 9303S-HM5C

U.S. Units

Hyd. Flow GPM	GPM at 30 PSI	GPM at 40 PSI	GPM at 50 PSI	GPM at 60 PSI	GPM at 70 PSI	GPM at 80 PSI	GPM at 90 PSI	GPM at 100 PSI	GPM at 110 PSI	GPM at 120 PSI	GPM at 130 PSI
13	113	105	97	86	73	59	44				
14	128	123	116	108	98	88	74	61	44		
15	135	132	126	119	110	100	89	77	66	50	20
16	145	142	137	132	126	117	107	95	83	70	55

Westward Parts can source many other special order items that are not listed in this catalogue, please visit our website at westwardparts.com or call us directly at 1-888-937-7278. Our team will help you find what you need.
The product images shown are for illustration purposes only and may not be an exact representation of the product.

Centrifugal Pumps

Hydraulically-Driven, Cast Iron & Stainless Steel, Self-Priming

Series 9303C-SP and 9303S-SP

PENTAIR
HYPRO® · SHURFLO®

Features:

- Available in cast iron and 316 stainless steel for extended pump life
- Hydraulic motor drive (for open center, closed center and load-sensing systems)
- Port sizes: 1-1⁄2" NPT inlet, 1-1⁄4" NPT outlet
- Max. fluid temperature: 140°F/60°C
- Impeller: Cast Iron models – Nylon; (GTX available) Stainless Steel models – Polypropylene
- Motor: internal gear gerotor
- Hydraulic ports: 1⁄2" NPT inlet, 3⁄4" NPT outlet
- Max. motor psi: 3000 (bar: 207)
- Pump seals: Cast Iron models – Viton®/ceramic standard; Life Guard silicon carbide (B) available; Stainless Steel models

– Life Guard silicon carbide standard

- Life Guard seals are the industry standard on OEM equipment
- Hydraulic motor seal: double-lip Teflon® and case drain available
- Weight: 38 lbs./17.3 kg

Upgrade Options:

- Increase dry-run and abrasive resistance with Life Guard Seals

– Life Guard seals are the OEM standard

- Extend pump life with Stainess Steel

– Fact: Chemical corrosion, pump cavitation, and abrasive wear are key factors in pump life

– 316 Stainless Steel pumps provide superior chemical corrosion resistance, while maintaining material strength to prolong the life against abrasive wear

– 316 Stainless Steel resists cavitation pitting of pumps, extending the wear life

– Drop in replacements for cast iron pumps

Mfr Part #	Max GPM	Max LPM	Max PSI	Max BAR	Max Hyd. GPM	Max Hyd. LPM	Hydraulic Selection System
9303C-HM1C-SP	122	462	130	9.0	13	49.2	Open/Closed
9303C-HM2C-SP	104	398	80	5.5	6	22.7	Open/Closed
9303C-HM3C-SP	120	454	95	6.5	24	90.8	Open/Closed
9303C-HM4C-SP	99	375	97	6.7	7	26.5	Open/Closed
9303C-HM5C-SP	140	530	140	9.7	16	60.5	Open/Closed
9303S-HM1C-SP	114	432	130	9.0	13	49.2	Open/Closed
9303S-HM2C-SP	97	361	95	6.5	6	22.7	Open/Closed
9303S-HM3C-SP	125	473	98	6.8	20	75.7	Open/Closed
9303S-HM4C-SP	115	435	93	6.4	7	26.5	Open/Closed
9303S-HM5C-SP	147	556	145	9.9	16	60.5	Open/Closed
3430-0589	Life Guard silicon carbide seal kit						
3430-0480SP	Self priming chamber kit						

Life Guard silicon carbide seal - Add suffix "B" (i.e.: 9303C-HM1C-SP-B)

How to order:
Specify Mfr Part #
Example: 9303C-HM3C-SP

Westward Parts can source many other special order items that are not listed in this catalogue, please visit our website at westwardparts.com or call us directly at 1-888-937-7278. Our team will help you find what you need.
The product images shown are for illustration purposes only and may not be an exact representation of the product.

Continued on next Page

Centrifugal Pumps

Hydraulically-Driven, Cast Iron & Stainless Steel, Self-Priming - Series 9303C-SP and 9303S-SP

PENTAIR
HYPRO® · SHURFLO®

9303C-HM1C-SP, 9303S-HM1C-SP

U.S. Units

Hyd. Flow GPM	GPM at 10 PSI	GPM at 20 PSI	GPM at 30 PSI	GPM at 40 PSI	GPM at 50 PSI	GPM at 60 PSI	GPM at 70 PSI	GPM at 80 PSI	GPM at 90 PSI	GPM at 100 PSI	GPM at 110 PSI
11	119	111	102	89	75	58	42	25			
12	122	120	113	104	94	81	69	55	39	24	
13	122	121	119	111	102	90	78	65	52	39	26

9303C-HM2C-SP, 9303S-HM2C-SP

U.S. Units

Hyd. Flow GPM	GPM at 10 PSI	GPM at 20 PSI	GPM at 30 PSI	GPM at 40 PSI	GPM at 50 PSI	GPM at 60 PSI	GPM at 70 PSI
4	57	43	26				
5	80	67	53	39	23		
6	98	88	78	67	55	42	29

9303C-HM3C-SP, 9303S-HM3C-SP

U.S. Units

Hyd. Flow GPM	GPM at 10 PSI	GPM at 20 PSI	GPM at 30 PSI	GPM at 40 PSI	GPM at 50 PSI	GPM at 60 PSI	GPM at 70 PSI	GPM at 80 PSI
15	104	90	74	55	23			
18	119	113	102	87	69	46		
20	120	119	114	106	91	74	55	33

9303C-HM4C-SP, 9303S-HM4C-SP

U.S. Units

Hyd. Flow GPM	GPM at 10 PSI	GPM at 20 PSI	GPM at 30 PSI	GPM at 40 PSI	GPM at 50 PSI	GPM at 60 PSI	GPM at 70 PSI	GPM at 80 PSI
5	72	60	46	30	15			
6	87	79	66	52	38	27	13	
7	95	91	84	71	58	42	30	16

9303C-HM5C-SP, 9303S-HM5C-SP

U.S. Units

Hyd. Flow GPM	GPM at 10 PSI	GPM at 20 PSI	GPM at 30 PSI	GPM at 40 PSI	GPM at 50 PSI	GPM at 60 PSI	GPM at 70 PSI	GPM at 80 PSI	GPM at 90 PSI	GPM at 100 PSI	GPM at 110 PSI
13	114	111	102	89	75	58	42	25			
14	118	117	113	104	94	81	69	55	39	24	
15	122	121	119	111	102	90	78	65	52	39	26

Westward Parts can source many other special order items that are not listed in this catalogue, please visit our website at westwardparts.com or call us directly at 1-888-937-7278. Our team will help you find what you need.
The product images shown are for illustration purposes only and may not be an exact representation of the product.

Centrifugal Pumps

Hydraulically-Driven, Polyproplene

PENTAIR
HYPRO® · SHURFLO®

Series 9303P

Features:

- Hydraulic motor drive (for open center, closed center and load-sensing systems)
- Port sizes: 1-1⁄2" NPT inlet, 1-1⁄4" NPT outlet
- Max. fluid temperature: 140°F/60°C
- Housing: Polypropylene
- Impeller: Polypropylene
- Motor: internal gear gerotor
- Hydraulic ports: 1⁄2" NPT inlet, 3⁄4" NPT outlet
- Pump seals: Viton®/ceramic standard; Life Guard silicon carbide (B) available
- Life Guard seals are the industry standard on OEM equipment
- Hydraulic motor seal: double-lip Teflon® and case drain available
- Max. motor psi: 3000 (bar: 207)
- Weight: 21 lbs./9.5 kg

Upgrade Options:

- Increase dry-run and abrasive resistance with Life Guard Seals

– Life Guard seals are the OEM standard

Mfr Part #	Max GPM	Max LPM	Max PSI	Max BAR	Max Hyd. GPM	Max Hyd. LPM	Hydraulic Selection System
9303P-HM1C	110	416	130	9.0	13	49.2	Open/Closed
9303P-HM2C	82	310	95	6.5	6	22.7	Open/Closed
9303P-HM3C	110	416	93	6.4	24	90.8	Open/Closed
9303P-HM4C	82	310	84	5.3	7	26.5	Open/Closed
9303P-HM5C	113	427	120	8.3	16	60.5	Open/Closed
3430-0445	Seal and o-ring repair kit						
3430-0593	Life Guard silicon carbide seal kit						

Life Guard silicon carbide seal - Add suffix "B" (i.e.: 9303P-HM1C-B)

How to order:
Specify Mfr Part #
Example: 9303P-HM1C

9303P-HM1C

U.S. Units

Hyd. Flow GPM	GPM at 10 PSI	GPM at 20 PSI	GPM at 30 PSI	GPM at 40 PSI	GPM at 50 PSI	GPM at 60 PSI	GPM at 70 PSI	GPM at 80 PSI	GPM at 90 PSI	GPM at 100 PSI	GPM at 110 PSI	GPM at 120 PSI
11	93	90	86	80	74	67	59	49	36	18		
12	102	99	95	91	87	81	74	66	55	39	19	
13	109	106	103	99	94	88	82	74	65	54	42	28

9303P-HM2C

U.S. Units

Hyd. Flow GPM	GPM at 10 PSI	GPM at 20 PSI	GPM at 30 PSI	GPM at 40 PSI	GPM at 50 PSI	GPM at 60 PSI	GPM at 70 PSI	GPM at 80 PSI	GPM at 90 PSI
5	65	56	46	38	20				
6	74	72	64	56	48	38	21		
7	80	75	70	62	57	48	40	28	9

9303P-HM3C

U.S. Units

Hyd. Flow GPM	GPM at 10 PSI	GPM at 20 PSI	GPM at 30 PSI	GPM at 40 PSI	GPM at 50 PSI	GPM at 60 PSI	GPM at 70 PSI	GPM at 80 PSI	GPM at 90 PSI
15	85	80	70	60	44				
18	100	97	92	84	76	63	48		
20	109	108	104	99	90	82	71	60	39

9303P-HM4C

U.S. Units

Hyd. Flow GPM	GPM at 10 PSI	GPM at 20 PSI	GPM at 30 PSI	GPM at 40 PSI	GPM at 50 PSI	GPM at 60 PSI	GPM at 70 PSI	GPM at 80 PSI
5	60	52	41	26				
6	70	66	58	48	37	21		
7	80	76	70	63	55	45	32	15

9303P-HM5C

U.S. Units

Hyd. Flow GPM	GPM at 10 PSI	GPM at 20 PSI	GPM at 30 PSI	GPM at 40 PSI	GPM at 50 PSI	GPM at 60 PSI	GPM at 70 PSI	GPM at 80 PSI	GPM at 90 PSI	GPM at 100 PSI	GPM at 110 PSI
12	94	92	86	78	68	58	44	15			
13	100	98	94	88	79	70	60	48	25		
14	108	107	104	100	94	86	77	68	57	42	
15	113	112	110	106	100	93	86	78	68	56	40

Centrifugal Pumps

Hydraulically-Driven, Cast Iron & Stainless Steel

PENTAIR
HYPRO® · SHURFLO®

Series 9306C and 9306S

Features:

- Hydraulic motor drive (for open center, closed center and load-sensing systems)
- Port sizes: 2" NPT inlet, 1-1⁄2" NPT outlet; 220 x 220 (U) Universal flange available
- Max. fluid temperature: 140°F/60°C
- Available in cast iron and 316 stainless steel for extended pump life
- Impeller: Nylon (cast iron models); polypropylene (stainless steel models); (GTX available)
- Motor: internal gear gerotor
- Hydraulic ports: 1⁄2" NPT inlet, 3⁄4" NPT outlet
- Max. motor psi: 3000 (bar: 207)
- Pump seals: Cast Iron models – Viton®/ceramic standard; Life Guard silicon carbide (B) available; Stainless Steel models

– Life Guard silicon carbide standard

- Life Guard seals are the industry standard on OEM equipment
- Hydraulic motor seal: double-lip Teflon® and case drain available
- Weight: 33 lbs./15 kg

Upgrade Options:

- Increase dry-run and abrasive resistance with Life Guard Seals

– Life Guard seals are the OEM standard

- Extend pump life with Stainess Steel

– Fact: Chemical corrosion, pump cavitation, and abrasive wear are key factors in pump life

– 316 Stainless Steel pumps provide superior chemical corrosion resistance, while maintaining material strength to prolong the life against abrasive wear

– 316 Stainless Steel resists cavitation pitting of pumps, extending the wear life

– Drop in replacements for cast iron pumps

For Flanged Connections You Will Also Need:
Universal Flange Gasket Universal Flange Clamp

Mfr Part #	Max GPM	Max LPM	Max PSI	Max BAR	Max Hyd. GPM	Max Hyd. LPM	Hydraulic Selection System
9306C-HM1C*	207	784	127	8.8	13	49.2	Open/Closed
9306C-HM3C*	214	810	128	8.8	24	90.8	Open/Closed
9306C-HM5C*	212	803	140	9.6	17	64.4	Open/Closed
9306S-HM1C	207	784	127	8.8	13	49.2	Open/Closed
9306S-HM3C	214	810	128	8.8	24	90.8	Open/Closed
9306S-HM5C	212	803	140	9.6	17	64.4	Open/Closed
3430-0332	Seal and o-ring repair kit						
3430-0589	Life Guard silicon carbide seal kit						

*Universal Flange (220 x 220) - Add Suffix "U" (i.e.: 9306C-HM3C-U) - Life Guard silicon carbide seal - Add suffix "B" (i.e.: 9306C-HM3C-B)

9306C-HM1C, 9306S-HM1C, 9306C-HM1C-U, 9306S-HM1C-U

U.S. Units

Hyd. Flow GPM	GPM at 30 PSI	GPM at 40 PSI	GPM at 50 PSI	GPM at 60 PSI	GPM at 70 PSI	GPM at 80 PSI	GPM at 90 PSI	GPM at 100 PSI	GPM at 110 PSI	GPM at 120 PSI
11	207	200	186	155	122	88	44			
12	207	207	196	179	149	119	88	53		
13	207	207	207	195	171	144	115	85	53	20

9306C-HM3C, 9306S-HM3C, 9306C-HM3C-U, 9306S-HM3C-U

U.S. Units

Hyd. Flow GPM	GPM at 40 PSI	GPM at 50 PSI	GPM at 60 PSI	GPM at 70 PSI	GPM at 80 PSI	GPM at 90 PSI	GPM at 100 PSI	GPM at 110 PSI	GPM at 120 PSI
18	190	179	159	90					
20	214	203	199	181	139	49			
22	214	214	214	210	198	176	127	16	
24	214	214	214	214	214	210	190	154	101

9306C-HM5C, 9306S-HM5C, 9306C-HM5C-U, 9306S-HM5C-U

U.S. Units

Hyd. Flow GPM	GPM at 40 PSI	GPM at 50 PSI	GPM at 60 PSI	GPM at 70 PSI	GPM at 80 PSI	GPM at 90 PSI	GPM at 100 PSI	GPM at 110 PSI	GPM at 120 PSI	GPM at 130 PSI
15	212	212	212	187	150	114	65	19		
16	212	212	212	212	189	158	125	87	42	
17	212	212	212	212	212	189	162	133	102	58

How to order:
Specify Mfr Part #
Example: 9306S-HM3C

Centrifugal Pumps

Hydraulically-Driven, Cast Iron & Stainless Steel-3U Flanged

PENTAIR
HYPRO® · SHURFLO®

Series 9306C-3U and 9306S-3U

Features:

- Hydraulic motor drive (for open center, closed center and load-sensing systems)
- Port Sizes: 300 x 220 (3U) Universal flange
- Max. fluid temperature: 140°F/60°C
- Available in cast iron and 316 stainless steel for extended pump life
- Impeller: Nylon (cast iron models); polypropylene (stainless steel models); (GTX available)
- Motor: internal gear gerotor
- Hydraulic ports: 1⁄2" NPT inlet, 3⁄4" NPT outlet
- Max. motor psi: 3000 (bar: 207)
- Pump seals: Cast Iron models – Viton®/ceramic standard;
- Life Guard silicon carbide (B) available; Stainless Steel models

– Life Guard silicon carbide

- Life Guard seals are the industry standard on OEM equipment
- Hydraulic motor seal: double-lip Teflon® and case drain available
- Weight: 33 lbs./15 kg

Upgrade Options:

- Increase dry-run and abrasive resistance with Life Guard Seals

– Life Guard seals are the OEM standard

- Extend pump life with Stainess Steel

– Fact: Chemical corrosion, pump cavitation, and abrasive wear are key factors in pump life

– 316 Stainless Steel pumps provide superior chemical corrosion resistance, while maintaining material strength to prolong the life against abrasive wear

– 316 Stainless Steel resists cavitation pitting of pumps, extending the wear life

– Drop in replacements for cast iron pumps

For Flanged Connections You Will Also Need:
Universal Flange Gasket Universal Flange Clamp

Mfr Part #	Max GPM	Max LPM	Max PSI	Max BAR	Max Hyd. GPM	Max Hyd. LPM	Hydraulic Selection System
9306C-HM1C-3U	283	1071	127	8.8	13	49.2	Open/Closed
9306C-HM3C-3U	322	1219	128	8.8	24	90.3	Open/Closed
9306C-HM5C-3U	312	1181	140	9.6	17	64.4	Open/Closed
9306S-HM1C-3U	283	1071	127	8.8	13	49.2	Open/Closed
9306S-HM3C-3U	322	1219	128	8.8	24	90.3	Open/Closed
9306S-HM5C-3U	312	1181	140	9.6	17	64.4	Open/Closed
3430-0332	Seal and o-ring repair kit						
3430-0589	Life Guard silicon carbide seal kit						

Life Guard silicon carbide seal - Add suffix "B" (i.e.: 9306C-HM1C-B3U)

9306C-HM1C-3U, 9306S-HM1C-3U

U.S. Units

Hyd. Flow GPM	GPM at 30 PSI	GPM at 40 PSI	GPM at 50 PSI	GPM at 60 PSI	GPM at 70 PSI	GPM at 80 PSI	GPM at 90 PSI	GPM at 100 PSI	GPM at 110 PSI	GPM at 120 PSI
11	255	225	190	155	122	88	44	5		
12	271	242	211	179	149	119	88	53	19	
13	283	258	226	199	171	144	115	85	53	24

9306C-HM3C-3U, 9306S-HM3C-3U

U.S. Units

Hyd. Flow GPM	GPM at 30 PSI	GPM at 40 PSI	GPM at 50 PSI	GPM at 60 PSI	GPM at 70 PSI	GPM at 80 PSI	GPM at 90 PSI	GPM at 100 PSI	GPM at 110 PSI	GPM at 120 PSI
18	285	256	213	165	90					
20	308	297	268	233	192	139	49			
22	312	312	308	288	255	219	176	127	16	
24	322	322	320	316	298	265	231	196	154	101

9306C-HM5C-3U, 9306S-HM5C-3U

U.S. Units

Hyd. Flow GPM	GPM at 30 PSI	GPM at 40 PSI	GPM at 50 PSI	GPM at 60 PSI	GPM at 70 PSI	GPM at 80 PSI	GPM at 90 PSI	GPM at 100 PSI	GPM at 110 PSI	GPM at 120 PSI	GPM at 130 PSI
15	285	269	242	212	182	149	112	68	19		
16	308	291	269	242	212	179	149	115	78	37	
17	312	312	297	270	242	214	187	154	122	82	44

How to order:
Specify Mfr Part #
Example: 9306S-HM5C-3U

Centrifugal Pumps

Belt-Driven, Cast Iron, Self-Priming

PENTAIR
HYPRO® · SHURFLO®

Series 9400C-SP

Features:

- Drive: 12-groove belt
- Spring-loaded belt tensioner
- Stainless steel wear ring
- Stainless steel pump shaft, standard
- Port sizes: 1-1/2" NPT inlet, 1-1/4" NPT outlet
- Max. fluid temperature: 140°F/60°C
- Housing: Cast iron
- Impeller: Nylon
- Pump shaft rotation: Counter clockwise when looking at shaft end
- Pump seals: Viton®/ceramic standard; Life Guard silicon carbide (B) available
- Life Guard seals are the industry standard on OEM equipment
- Weight: 57 lbs./25.9 kg

Upgrade Options:

- Increase dry-run and abrasive resistance with Life Guard Seals

– Life Guard seals are the OEM standard

Mfr Part #	Max GPM	Max LPM	Max PSI	Max BAR	Max RPM	PTO Output
9403C-540-SP	120	454	99	6.8	600	1-3/8" female, 6 spline shaft
9403C-540Q-SP	120	454	99	6.8	600	1-3/8" 6 spline quick coupler
9403C-540S-SP	120	454	99	6.8	600	1" (25.4 mm) solid shaft
9403C-1000-SP	120	454	99	6.8	1000	1-3/8" female, 21-spline shaft
9403C-1000L-SP	120	454	99	6.8	1000	1-3/4" female, 20-spline shaft
3430-0332	Seal kit standard					
3430-0589	Life Guard silicon carbide seal kit					
3430-0480SP	Self priming chamber kit					

Life Guard silicon carbide seal - Add suffix "B" (i.e.: 9403C-540-SP-B)

U.S. Units

9403C-540-SP

RPM	GPM at 10 PSI	GPM at 20 PSI	GPM at 30 PSI	GPM at 40 PSI	GPM at 50 PSI	GPM at 60 PSI	GPM at 70 PSI	GPM at 80 PSI	GPM at 90 PSI
500	114	113	101	83	60	27			
540	120	119	116	102	85	62	32		
600	120	120	120	119	110	97	78	54	24

U.S. Units

9403C-1000-SP

RPM	GPM at 10 PSI	GPM at 20 PSI	GPM at 30 PSI	GPM at 40 PSI	GPM at 50 PSI	GPM at 60 PSI	GPM at 70 PSI	GPM at 80 PSI	GPM at 90 PSI
800	111	109	94	74	47	21			
900	120	119	116	102	85	62	32		
1000	120	120	120	119	110	97	78	54	24

How to order:
Specify Mfr Part #
Example: 9403C-540-SP

Westward Parts can source many other special order items that are not listed in this catalogue, please visit our website at westwardparts.com or call us directly at 1-888-937-7278. Our team will help you find what you need.
The product images shown are for illustration purposes only and may not be an exact representation of the product.

Centrifugal Pumps

Belt-Driven, Cast Iron, Polpropylene & Stainless Steel

PENTAIR
HYPRO® · SHURFLO®

Series 9400 Belt Drive

Features

- Available in cast iron, polypropylene and 316 stainless steel for extended pump life
- Drive: 12-groove belt
- Spring-loaded belt tensioner
- Stainless steel wear ring
- Stainless steel pump shaft, standard
- Port sizes: 9402 models – 1-1⁄4" NPT inlet, 1" NPT outlet; 9403 models – 1-1⁄2" NPT inlet, 1-1⁄4" NPT outlet
- 220 x 200 universal flange available (U)
- Max. fluid temperature: 140°F/60°C
- Impeller: Cast Iron models – Nylon; Poly & Stainless Steel models – Polypropylene
- Pump shaft rotation: Counter clockwise when looking at shaft end
- Pump seals: Viton®/ceramic standard; Life Guard silicon carbide (B) available
- Life Guard seals are the industry standard on OEM equipment
- Weight: 40-45 lbs./18.2-20.5 kg

Upgrade Options:

- Increase dry-run and abrasive resistance with Life Guard Seals

– Life Guard seals are the OEM standard

- Extend pump life with Stainess Steel

– Fact: Chemical corrosion, pump cavitation, and abrasive wear are key factors in pump life

– 316 Stainless Steel pumps provide superior chemical corrosion resistance, while maintaining material strength to prolong the life against abrasive wear

– 316 Stainless Steel resists cavitation pitting of pumps, extending the wear life

– Drop in replacements for cast iron pumps

Mfr Part #	Max GPM	Max LPM	Max PSI	Max BAR	Max RPM	PTO Output
9402C-540	76	283	95	6.5	600	1-3⁄8" female, 6-spline shaft
9402C-540Q	76	283	95	6.5	600	1-3⁄8" 6-spline quick coupler
9402C-540S	76	283	95	6.5	600	1" (25.4 mm) solid shaft
9402C-1000	76	283	95	6.5	1000	1-3⁄8" female, 21-spline shaft
9402C-1000L	76	283	95	6.5	1000	1-3⁄4" female, 20-spline shaft
9402C-1000S	76	283	95	6.5	1000	1" (25.4 mm) solid shaft
9403C-540†	140	530	104	7.2	600	1-3⁄8" female, 6-spline shaft
9403C-540Q†	140	530	104	7.2	600	1-3⁄8" 6-spline quick coupler
9403C-540S†	140	530	104	7.2	600	1" (25.4 mm) solid shaft
9403C-1000†	140	530	104	7.2	1000	1-3⁄8" female, 21-spline shaft
9403C-1000L†	140	530	104	7.2	1000	1-3⁄4" female, 20-spline shaft
9403C-1000-MTZ*	164	617	113	7.8	1000	38 mm female, 8-spline shaft
9403C-1000-MTZ-KIT*	Includes pump, Anti-rotation Kit and Vent Line kit					
9403C-1000S†	140	530	104	7.2	1000	1" (25.4 mm) solid shaft
9403P-540	91	344	83	5.7	600	1-3⁄8" female, 6-spline shaft
9403P-540Q	91	344	83	5.7	600	1-3⁄8" 6-spline quick coupler
9403P-540S	91	344	83	5.7	600	1" (25.4 mm) solid shaft
9403P-1000	86	326	83	5.7	1000	1-3⁄8" female, 21-spline shaft
9403P-1000L	86	326	83	5.7	1000	1-3⁄4" female, 20-spline shaft
9403P-1000S	86	326	83	5.7	1000	1" (25.4 mm) solid shaft
9403S-540	140	530	104	7.2	540	1-3⁄8" female, 6-spline shaft
9403S-540Q	140	530	104	7.2	540	1-3⁄8"" 6-spline quick coupler
9403S-540S	140	530	104	7.2	540	1" (25.4 mm) solid shaft
9403S-1000	140	530	104	7.2	1000	1-3⁄8" female, 21-spline shaft
9403S-1000L	140	530	104	7.2	1000	1-3⁄4" female, 20-spline shaft
9403S-1000S	140	530	104	7.2	1000	1" (25.4 mm) solid shaft
3430-0332	Seal and o-ring repair kit					
3430-0476	Seal, o-ring, belt and gasket repair kit for 540 rpm drives					
3430-0477	Seal, o-ring, belt and gasket repair kit for 1000 rpm drives					
3430-0589	Life Guard silicon carbide seal kit					
3430-0333	Seal and o-ring repair kit (polypropylene)					
3430-0478	Seal, o-ring, belt and gasket repair kit for 540 rpm drives (polypropylene)					
3430-0479	Seal, o-ring, belt and gasket repair kit for 1000 rpm drives (polypropylene)					
3430-0590	Life Guard silicon carbide seal kit (polypropylene)					
3430-0796*	Anti-Rotation Kit for MTZ pump					

†Universal Flange (220 x 200) - Add Suffix "U" (i.e.: 9403C-1000S-U)
Life Guard silicon carbide seal - Add suffix "B" (i.e.: 9402C-540-B)

Viton® is a registered trademark of DuPont. Hypro® is a registered trademark of Pentair.
* For tractors MTZ 80 and 82.

How to order:
Specify Mfr Part #
Example: 9402C-1000

Continued on next Page

Centrifugal Pumps

Belt-Driven, Cast Iron, Polpropylene & Stainless Steel - Series 9400 Belt Drive

PENTAIR
HYPRO® · SHURFLO®

9402C-540 — U.S. Units

RPM	GPM at 20 PSI	GPM at 30 PSI	GPM at 40 PSI	GPM at 50 PSI	GPM at 60 PSI	GPM at 70 PSI	GPM at 80 PSI	GPM at 90 PSI
450	61	58	50	36				
500	67	66	62	56	42			
540	71	71	70	65	58	44		
600	76	76	76	75	73	66	56	42

9403P-540 — U.S. Units

RPM	GPM at 20 PSI	GPM at 30 PSI	GPM at 40 PSI	GPM at 50 PSI	GPM at 60 PSI	GPM at 70 PSI	GPM at 80 PSI
450	68	60	46	20			
500	74	70	60	48	22		
540	82	78	70	60	46		
600	91	88	79	72	64	58	38

9402C-1000 — U.S. Units

RPM	GPM at 20 PSI	GPM at 30 PSI	GPM at 40 PSI	GPM at 50 PSI	GPM at 60 PSI	GPM at 70 PSI	GPM at 80 PSI	GPM at 90 PSI	GPM at 100 PSI
800	68	67	64	57	41				
900	74	74	73	71	64	54	41		
1000	76	76	76	76	76	72	65	56	43

9403P-1000 — U.S. Units

RPM	GPM at 20 PSI	GPM at 30 PSI	GPM at 40 PSI	GPM at 50 PSI	GPM at 60 PSI	GPM at 70 PSI	GPM at 80 PSI
800	73	66	58	42			
900	82	78	70	60	46		
1000	86	86	79	72	64	58	38

9403C-540, 9403S-540 — U.S. Units

RPM	GPM at 20 PSI	GPM at 30 PSI	GPM at 40 PSI	GPM at 50 PSI	GPM at 60 PSI	GPM at 70 PSI	GPM at 80 PSI	GPM at 90 PSI	GPM at 100 PSI
450	107	99	86	50					
500	121	116	106	93	76	42			
540	129	127	120	111	98	80	50		
600	140	138	135	130	121	112	94	73	40

9403C-1000, 9403S-1000 — U.S. Units

RPM	GPM at 20 PSI	GPM at 30 PSI	GPM at 40 PSI	GPM at 50 PSI	GPM at 60 PSI	GPM at 70 PSI	GPM at 80 PSI	GPM at 90 PSI	GPM at 100 PSI
800	115	106	96	80	56				
900	129	127	120	111	98	80	50		
1000	140	139	137	133	128	119	100	76	46

9403C-1000-MTZ — U.S. Units

RPM	GPM at 10 PSI	GPM at 20 PSI	GPM at 30 PSI	GPM at 40 PSI	GPM at 50 PSI	GPM at 60 PSI	GPM at 70 PSI	GPM at 80 PSI	GPM at 90 PSI	GPM at 100 PSI	GPM at 110 PSI
800	136	132	123	112	98	70	45				
900	150	149	145	135	125	115	97	72	35		
1000	163	162	160	155	150	140	130	115	95	75	45

Westward Parts can source many other special order items that are not listed in this catalogue, please visit our website at westwardparts.com or call us directly at 1-888-937-7278. Our team will help you find what you need.
The product images shown are for illustration purposes only and may not be an exact representation of the product.

Centrifugal Pumps

Understanding Mechanical Seal Options

PENTAIR
HYPRO® · SHURFLO®

Standard
Industry tested and proven

Common Uses:
Less demanding applications; minimal dry run or abrasive solution

Material: Carbon on Ceramic

How it Works: Mechanical seals depend on their seal face conditions of flatness and finish to maintain their sealing function while allowing the shaft to rotate. A spring ensures the seal faces stay in contact to prevent leaking. Elastomers are mated with adjacent shaft and housing components to complete the sealing system.

Pro:
- Dependable life when protected from dry run and abrasives
- Least expensive option

Con:
- Minimal dry run resistance
- Limited service life in abrasive solutions
- Susceptible to chemical & fertilizer bonding failures

Life Guard
The OEM standard

Common Uses:
Suited for broad spraying applications including abrasive solutions

Material: Silicon Carbide

Advantages over Standard: The hardness of Silicon Carbide approaches that of diamond and allows the seal to have outstanding service life when pumping abrasive solutions. Carbon graphite flakes are embedded into the silicon carbide faces to increase lubricity and provide survivability against incidental dry run and thermal shock.

Pro:
- Extended service life in abrasive solutions
- Enhanced dry run resistance
- Drop-in replacement for standard seal

Con:
- Does not eliminate dry run failure
- Susceptible to chemical & fertilizer bonding failures
- Increased cost

ForceField Technology
The premium choice

Common Uses:
Applications where downtime must be avoided.

Material: Carbon on Silicon

Advantages over Life Guard: ForceField we seal technology protects seals by using a barrier fluid to keep them cool and lubricated, even while the pump is running dry. ForceField technology actively maintains a positive pressure differential between the chamber barrier fluid and the pumping solution,which prevents chemical bonding of the seal faces. The result is increased life and maintenance free operation.

Pro:
- Eliminates dry run failure
- Prevents chemical & fertilizer bonding failures
- Maintenance-free operation
- Warranted for one full year

Con:
- Not a drop-in replacement for standard or Life Guard seals
- Increased cost

Centrifugal Pumps

Life Guard Silicon Carbide Pump Seals Specially Designed To Prolong Seal Life

PENTAIR
HYPRO® · SHURFLO®

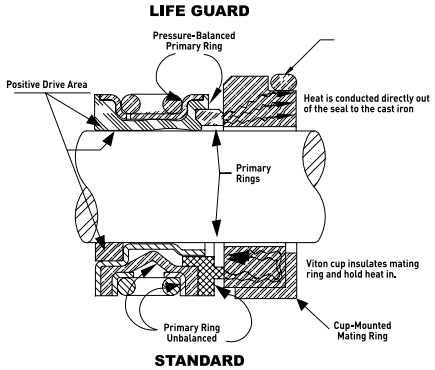

The drawing to the right represents a cross sectional view of a Life Guard Premium Silicon Carbide Seal (top) and a standard seal (bottom). There are three key differences shown in the drawing: material, mating rings and balance.

Material:
The Life Guard seal utilizes silicon carbide (SiC) for its seal surfaces (primary ring and mating ring). This is more abrasion resistant than the carbon graphite and ceramic used in standard seals. SiC also runs cooler if the pump is run dry, improving the life of the seal.

Mating Rings:
The O-ring style of the Life Guard seal mating ring allows heat to dissipate into the pump casting. This keeps the seal at a lower temperature and dramatically improves the chances of the seal to survive a dry-run episode.

Balance:
The bellows and primary ring of the Life Guard seal are pressure balanced. This results in cooler operation at higher pressures.
Life Guard silicon carbide seals are available in the following models: Pedestal mount, Flange mount, Clutch-driven, Hydraulically-driven, Belt-driven, and Gas Engine-driven.

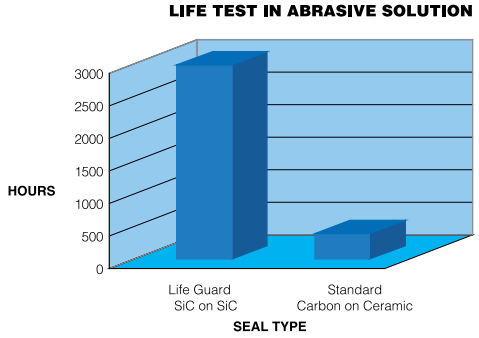

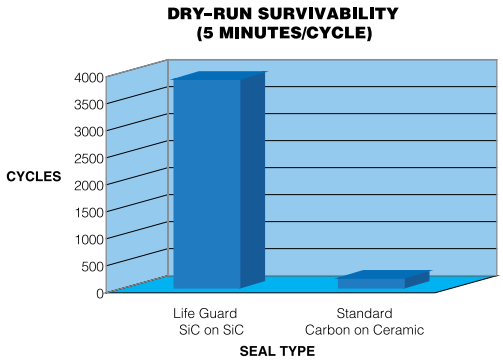

Life Guard Silicon Carbide Seal Kits

Mfr Part #	Pump Series/Model #	Size		Description	Estimated Weight Ea.
		US	Metric		
3430-0589	9200, 9300 and 9400 Cast and Stainless	5/8"	15.9 mm	Mechanical seal and o-ring	4 oz./114 g
3430-0593	9303P	5/8"	15.9 mm	Mechanical seal, o-ring, gasket and washer for under acorn nut	4 oz./114 g
3430-0601	9305C and 9305C-SP	5/8"	15.9 mm	Mechanical seal and o-ring	4 oz./114 g
3430-0590	All Poly Models	3/4"	19 mm	Mechanical seal, o-ring, gasket and washer for under acorn nut	4 oz./114 g
3430-0604	9307 Series	1-3/8"	35 mm	Mechanical seal, o-ring and gasket	4 oz/114 g
3430-0646	9205 Models	3/4"	19 mm	Mechanical seal and o-ring	4 oz./114 g
3430-0591	9000C-O and 9000C-O-SP	3/4"	19 mm	Mechanical seal and o-ring	4 oz./114 g

Centrifugal Pumps

Self-Priming Adaptor (SPA)

PENTAIR
HYPRO® · SHURFLO®

Provides Fast Self-Priming for Closed Impeller Cenrifugal Pumps

Features

- Creates self-priming capability for all standard centrifugal pump models
- Increases priming efficiency over open impeller transfer pumps and self-priming centrifugal pumps
- Allows the use of a single, high efficiency pump for both tank filling and spraying.
- Constructed out of 304 stainless steel for corrosion resistance
- Protects the pump's mechanical seal from dry-run during priming operations for on board loading
- Guards against unexpected dry-run conditions during spraying application, if system were to function automatically
- Allows centrifugal pumps to be mounted in tight-fitting configurations while maintaining priming and flow performance capabilities
- SPA can be mounted in nearby remote location up to 10 ft (3 m) from pump

Mfr Part #	Description
1530-0024S	2" NPT Self-Priming Adaptor
1530-0028S	2" NPT High Volume Self-Priming Adaptor
3430-0700	Mounting Kit

How to order:
Specify Mfr Part #.
Example: 1530-0024S

Self-Priming Adaptor Configuration

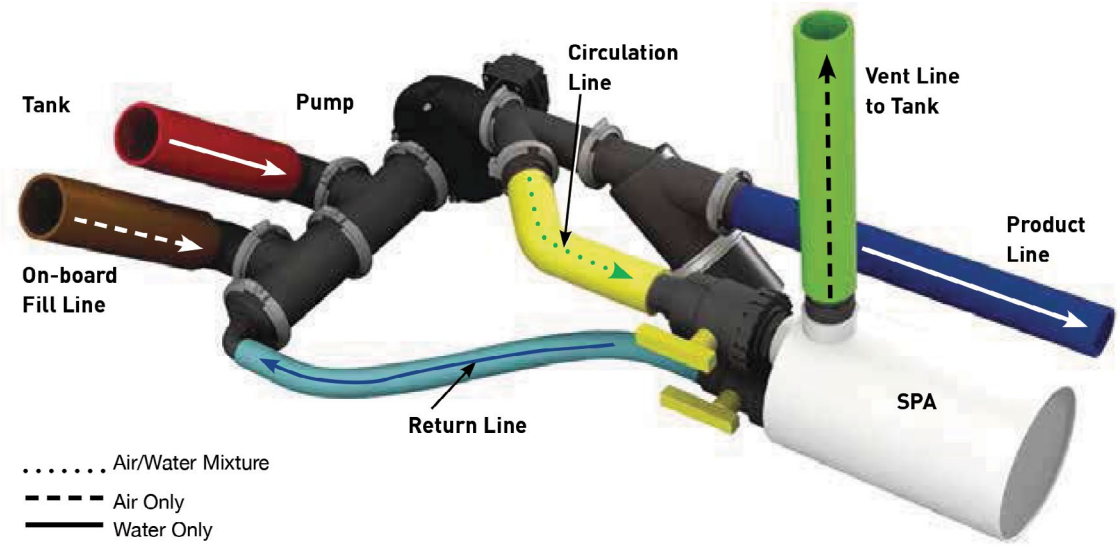

How the Self-Priming Adaptor Works

To facilitate pump priming, liquid is circulated through the pump and eye of the impeller. The attached Self- Priming Adaptor (SPA) stores an initial amount of liquid for the priming operation. The SPA, when activated with two ball valves, separates the air from the liquid being circulated and releases it back to the atmosphere through the vent line. Only liquid returns back to the pump inlet, thereby eliminating the inlet suction line of air. Once the pump is primed, pump pressure and flow increases. Flow is directed to the tank. The operator then closes the two ball valves, shutting off the circulation path between the pump and SPA.

Centrifugal Pumps

PENTAIR
HYPRO® · SHURFLO®

12 Volt Clutch

Mfr Part #	Shaft Size	Pulley Type	Max. HP	Max. RPM	Max. AMPS @ 12V	Pump Model	Est. Weight Ea.
2526-0011	7/8" (19 mm)	5.25" (140 mm)-A	30	5000	4.85	9203P, 9253P-C, 9500P-S, 9205C, 9205C-SP	8 lbs./3.6kg
3430-0592	5/8" (15.9 mm)	5.00" (125 mm) Double Groove-A	30	5000	3.75	9202C, 9203C, 9206C, 9203C-R, 9262C-C, 9263C-C, 9263C-CR, 9203C-SP, 9262S-C, 9263S-C, 9263S-CR, 9263C-C-SP, 9263C-CR-SP	9 lbs./4.1kg

Vent Line Kit

Mfr Part #	Description	Est. Weight Ea.
3430-0456	Vent line kit with 25' (6.3 m) long, 1/4" ID vinyl hose, 1/8" NPT x 1/4" HB 90° nylon elbow fitting, 1/8" NPT x 1/4" HB straight polypropylene fitting, plastic hose clamp and plastic cable tie. Works with all Hypro centrifugals.	14 oz./397g
3430-0797	Push-to-connect vent line kit with 25' (6.3 m) long, 1/4" polyethylene tubing, 1/8" MNPT x 1/4" push-to-connect straight, 1/8" MNPT x 1/4" push-to-connect 90° elbow, and plastic cable ties. Works with all Hypro centrifugal pumps.	14 oz./397g

PTO Mounting Clips

Mfr Part #	Pump Series	Est. Weight Ea.
1520-0034	9000C-O (not for 9040 Series)	4 lbs./1.8 kg

Hydraulic Test Kit

Mfr Part #	Description	Est. Weight Ea.
3430-0650	Hydraulic test kit with pressure and tank fixtures with flow meter and digital pressure gauges. Works with all Hypro HM series motors.	20 lbs./9.1 kg

Centrifugal Pump Repair Tools

Mfr Part #	Pump Series	Description
3010-0061	9000	Main bearing suppport tool
3010-0064	9000, 9200, 9300	Support bar/sleeve extractor
3010-0066	9200, 9300	Wire brush
3010-0067	9200, 9300	Wire brush holder
3010-0084	9000, 9200, 9300	Internal/external retaining ring pliers
3010-0167	9000, 9300	Internal/external retaining ring pliers
3010-0168	9000, 9200, 9300	Tool box
3020-0008	9300	Allen wrench; 1/4" hex
3020-0009	9200, 9300	Allen wrench; 1/16" hex
3430-0650	9300	Hydraulic test kit

How to order:
Specify Mfr Part #
Example: 3010-0061

Transfer Pumps

Material Options:

PENTAIR
HYPRO® · SHURFLO®

Aluminum

Typical Use:
Water Transfer The aluminum construction does not lend itself well to chemical transfer.
Options include:
2” and 3” semi-trash and 3” trash

Cast Iron

Typical Use:
Liquid Fertilizer Transfer Cast iron transfer pumps have thicker castings and stand up well to high density liquid fertilizers.
Options include:
2” and 3” models available

Polypropylene

Typical Use:
Chemical Transfer Polypropylene has excellent corrosion resistance to virtually all Agricultural chemicals.
Options include:
2” and 3” models available

Drive Options:

Gas Engine

Typical Use:
Outdoor applications in a mobile environment such as on a sprayer nurse/tender trailer.

Hydraulic Motor

Typical Use:
Applications where a smaller footprint is desired and hydraulic power is available.

Electric Motor

Typical Use:
Indoor and outdoor stationary applications where electrical power is available.

Transfer Pumps

Polypropylene, Gas Engine-Driven, 2'' & 3''

PENTAIR
HYPRO® · SHURFLO®

1542P and 1543P

Features:

- Multiple gas engine options, including field proven Hypro PowerPro, Honda® and Briggs & Stratton® engines (EPA & CARB certified – North America; EC/CE Listed - Europe)
- Housings: 2" x 2" Polypropylene or 3" x 3" polypropylene – highest performance available in a 3" transfer pump with highest efficiency and horsepower on the market
- Pump Seals: EPDM Mechanical
- Suction Lift: 25 ft./7.62 m
- Poly impeller with stainless steel insert (3"); Nylon impeller (2") 1542P-65SP
- 2" versions available with or without frame

1542P-65SP

1543P-130SP

2" Gas Engine-Driven

Mfr Part #	Max GPM	Max LPM	Max PSI	Max BAR	Port Size	Impeller Profile	Engine Mfgr. & HP
1542P-65SP	200	757	58	4.0	2" x 2" NPT	5 vane	PowerPro 6.5 hp
1542P-65SPM	200	757	58	4.0	2" x 2" NPT	5 vane	PowerPro 6.5 hp with frame
1542P-65ESP	200	757	58	4.0	2" x 2" NPT	5 vane	PowerPro 6.5 hp w/ elec. start
1442P-65SP	200	757	58	4.0	2" x 2" NPT	5 vane	6.5 HP EC/CE listed
1542P-160HSP	200	757	58	4.0	2" x 2" NPT	5 vane	Honda® GX160
1542P-200HSP	200	757	58	4.0	2" x 2" NPT	5 vane	Honda® GX200
1542P-950BSP	200	757	58	4.0	2" x 2" NPT	5 vane	Briggs & Stratton® 950
1542P-55SP	150	568	58	4.0	2" x 2" NPT	3 vane	PowerPro 6.5 hp
1542P-550BSP	150	568	58	4.0	2" x 2" NPT	3 vane	Briggs & Stratton® 550
3410-0041	Cam lock kit						
3430-0690	Pump head kit for 1542P-55SP with EPDM seal						
3430-0691	Pump head kit for 1542P-65SP with EPDM seal						
3430-0635	EPDM seal kit						
3430-0659	Viton seal kit						

1542P-55SP , 1542P-550BSP — U.S. Units

GPM at 0 PSI	GPM at 10 PSI	GPM at 20 PSI	GPM at 30 PSI	GPM at 40 PSI	GPM at 50 PSI	GPM at 58 PSI
150	147	131	108	80	48	0

1542P-65SP , 1542P-200HSP, 1542P-950BSP — U.S. Units

GPM at 0 PSI	GPM at 10 PSI	GPM at 20 PSI	GPM at 30 PSI	GPM at 40 PSI	GPM at 50 PSI	GPM at 58 PSI
200	182	162	136	106	65	0

3" Gas Engine-Driven

Mfr Part #	Max GPM	Max LPM	Max PSI	Max BAR	Port Size	Impeller Profile	Engine Mfgr. & HP
1543P-130SP	440	1666	54	3.7	3"x 3" NPT	5 vane	PowerPro 13 HP
1543P-130ESP	440	1666	54	3.7	3"x 3" NPT	5 vane	PowerPro 13 HP w/ elec. start
1543P-130ESP-01	440	1666	54	3.7	300 x 300 UF	5 vane	PowerPro 13 HP w/ elec. start
1543-390EHSP	440	1666	54	3.7	3"x3"NPT	5 vane	Honda® GX390 w/ elec. start
3410-0042	Cam lock kit						
3430-0692	Pump head kit with EPDM seal						
3430-0692-02	Pump head kit with EPDM seal and 3" UF Fittings						
3430-0757	EPDM seal kit						
3430-0838	Viton seal kit						

1543P-130SP, 1543P-130ESP, 1543P-390EHSP, 1543P-130ESP-01

GPM at 0 PSI	GPM at 10 PSI	GPM at 20 PSI	GPM at 30 PSI	GPM at 40 PSI	GPM at 50 PSI	GPM at 58 PSI
440	400	338	269	184	68	0

How to order:
Specify Mfr Part #
Example: 1542P-65SP

Transfer Pumps

Polypropylene, Hydraulically-Driven, 2 in & 3 in.

Series 9342P and 9343P

Features:

- Housing: 2"x 2" or 3" X 3" Polypropylene
- Pump Seals: EPDM Mechancial
- Suction lift: 25 ft./7.62 m
- Poly impeller with stainless steel insert

PENTAIR
HYPRO® · SHURFLO®

2" Hydraulically-Driven

Mfr Part #	Max GPM	Max LPM	Max PSI	Max BAR	Port Size	Motor Capacity
9342P-HM1C-5SP	200	757	58	t40	2" x 2" NPT	10 gpm
9342P-HM5C-5SP	206	780	60	41	2" x 2" NPT	11 gpm
3430-0690	Pump head kit for HM1C with EPDM seal					
3430-0691	Pump head kit for HM5C with EPDM seal					
3430-0635	EPDM seal kit					
3430-0659	Viton seal kit					
3410-0041	Cam lock kit					

3" Hydraulically-Driven

Mfr Part #	Max GPM	Max LPM	Max PSI	Max BAR	Port Size	Engine Mfg. & HP
9343P-GM6-SP	450	1703	52	3.6	3"x 3" NPT	Hydraulic
9343P-GM6Y-SP*	450	1703	52	3.6	3"x 3" NPT	Hydraulic
9343P-GM10-SP	484	1832	58	4.0	3"x 3" NPT	Hydraulic
9343P-GM10Y-SP*	484	1832	58	4.0	3"x 3" NPT	Hydraulic
3430-0692	Pump head kit with EPDM seal					
3430-0692-02	Pump head kit with EPDM seal and 3" UF fittings					
3430-0757	EDPM seal kit					
3430-0838	Viton seal kit					
3410-0042	Cam lock kit					

* Y= case drain motor

9342P-HM1C-5SP — U.S. Units

Hyd. Flow GPM	GPM at 0 PSI	GPM at 10 PSI	GPM at 20 PSI	GPM at 30 PSI	GPM at 40 PSI	GPM at 50 PSI	GPM at 58 PSI
8	165	145	122	95	57		
9	185	166	144	119	86	0	
10	200	184	164	141	114	80	0

9342P-HM5C-5SP — U.S. Units

Hyd. Flow GPM	GPM at 0 PSI	GPM at 10 PSI	GPM at 20 PSI	GPM at 30 PSI	GPM at 40 PSI	GPM at 50 PSI	GPM at 60 PSI
9	175	154	123	84	0		
10	192	174	149	118	76	0	
11	206	189	169	145	117	79	0

9343P-GM6-SP — U.S. Units

Performance	Feet	0	12	23	35	46	58	69	81	92	104	116	127
	PSI	0	5	10	15	20	25	30	35	40	45	50	55
8 gal/min	GPM	342	316	284	240	176	67	-	-	-	-	-	-
9 gal/min	GPM	378	355	327	294	252	194	103	-	-	-	-	-
10 gal/min	GPM	414	394	371	345	314	276	227	155	52	-	-	-
11 gal/min	GPM	450	433	414	392	368	340	307	265	210	128	28	-

9343P-GM10-SP — U.S. Units

Performance	Feet	0	12	23	35	46	58	69	81	92	104	116	127
	PSI	0	5	10	15	20	25	30	35	40	45	50	55
12 gal/min	GPM	364	340	310	274	227	157	46	-	-	-	-	-
13 gal/min	GPM	391	368	342	312	275	227	158	55	-	-	-	-
14 gal/min	GPM	415	395	373	348	318	282	236	170	74	-	-	-
15 gal/min	GPM	445	426	406	383	357	327	292	247	187	102	7	-
16 gal/min	GPM	484	466	446	425	401	374	344	309	266	211	139	47

How to order:
Specify Mfr Part #
Example: 3430-0635

Transfer Pumps Accessories

Features:

- Hypro cam lock kits easily add heavy-duty male cam lock connections to the NPT ports of 2" and 3" polypropylene pumps.
- Includes one male cam lock adapter for pump inlet
- Includes one heavy-duty 90º elbow and one male cam lock adapter for the pump outlet
- Prepares transfer pumps for the most common means of quick coupling a hose
- Interchangeable with other cam lock fittings made to MIL-C-27487 specifications

Size	Mnf Part #
2" NPT	3410-0041
3" NPT	3410-0042

Roller Pump

Roller Pump Comparisons

PENTAIR
HYPRO® · SHURFLO®

Get up to 10 times longer pump life with Hypro Silver Series XL Roller pumps!

These three pump housings were photographed after being tested with a 30:1 mix of water and Roundup® herbicide.

The Ni-Resist and Cast Iron indicate damage from pitting and corrosion, but the Silver Series XL is in like-new condition after more than 1000 hours of use.

Herbicide Users:

Get up to 10 times longer pump life!

- Cast Iron pumps lasted to 140 hours before failure.
- Ni-Resist pumps lasted to 332 hours before failure.
- Silver Series X pumps ran over 1000 hours and still met new pump specs!

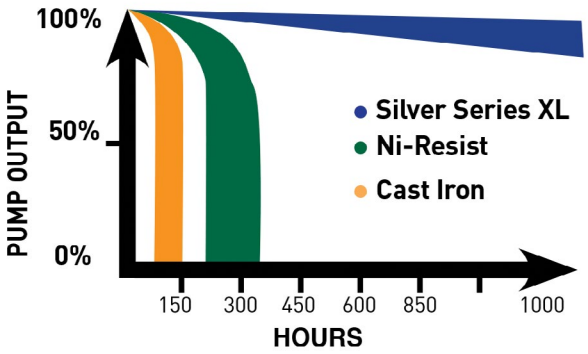

Silver Series XL | Ni-Resist | Cast Iron

Floating PTFE Coated Rotors

- Floating rotor design and black PTFE coating on metal rotors increases performance and extends pump life
- Standard production in 4001, 4101, 6500, & 7560 Silver Series XL and Ni-Resist pumps

Clear Coat Finish

- Offers increased protection from chemical attack and from the elements
- Included on all Ni-Resist roller pumps

Floating Design, PTFE Coating

Ni-Resist Pumps

Roller Pump

Which Roller Pump, Rollers and Seals Should You Use?

Application	Specific Chemicals	Suggestions							
		Housing Materials			Roller Materials			Seal Materials	
		Silver Series XL	Ni-Resist	Cast Iron	Super Roller	Poly Rollers	Teflon® Rollers*	Viton®	Buna-N
WEED CONTROL CHEMICALS	Emulsions, soluble powders, sodium arsenate.	X	X	X	X			X	
	Chemicals containing glyphosate (such as Roundup®) or other acidics	X			X	X	X*	X	
INSECT CONTROL	Emulsions not containing aromatic solvents.	X	X	X	X			X	
BRUSH CONTROL	Heavy-duty sprays using diesel oil for carrier.	X	X	X	X			X	
PEST CONTROL CHEMICALS, FUMIGANTS, ETC.	This category or use includes mosquito sprays, termite control liquids, nematocides, soil and grain fumigants where any of the following chemicals with aromatic solvents are present: Pentachlorophenol, xylene, xylol, benzene, high sulphur fuel or diesel oil. Fumigants containing: ethylene dichloride, ethylene dibromide, carbon tetrachloride, perchlorethylene, trighlorethylene, methyl bromide, and other aromatic solvents.	X	X	X	X			X	
LIQUID FERTILIZERS	Up to 32% nitrogen content, or others if the liquid is atmospheric pressure and the temperature is handled.	X	X			X			X
POWDERED FERTILIZERS	Fertilizers dissolved in water (greenhouse plant food).	X	X	X	X	X		X	X
PUMPING	Large quantities of plain water.	X	X	X	X	X		X	X
SPRAYING	Wettable powder sprays.	X	X	X	X	X		X	X
MATERIAL HANDLING	Heavy abrasive powders in suspension.	X	X	X	X	X		X	X
ACIDS	Mild sulfuric acid for spraying. Mild muriatic acid, inhibited muriatic, etc.	X				X	X*	X	

*Note: Limit Pressure at 100 psi (6.9 bar) when using Teflon® Rollers.

Westward Parts can source many other special order items that are not listed in this catalogue, please visit our website at westwardparts.com or call us directly at 1-888-937-7278. Our team will help you find what you need.
The product images shown are for illustration purposes only and may not be an exact representation of the product.

Roller Pump

Cast Iron, Ni-Resist or Silver Series XL

Series 4001 4 Roller

PENTAIR
HYPRO® · SHURFLO®

Features:

- Port size: 3⁄4" NPT
- Max. fluid temperature: 140°F/60°C
- Housing: Cast Iron (C), Ni-Resist (N) or Silvercast (XL)
- Pump shaft rotation: Clockwise when looking at the shaft end (counter clockwise available)
- Rollers: Super Rollers standard [Poly (T3) and Teflon® (T2)]
- Shaft Seals: Viton® standard
- Special torque arm and base kit is available for gas engines
- Rotor: Cast Iron, Ni-Resist or Silvercast
- Weight: 5 lbs./2.3 kg

Pressure in PSI and BAR	GPM LPM	HP HP	GPM LPM	HP HP	GPM LPM	HP HP
	@1100 RPM		@1400 RPM		@1800 RPM	
0 PSI	5.5	.06	7.1	.10	9.1	.14
0 BAR	20.8	.06	26.9	.10	34.4	.14
25 PSI	4.9	.14	6.4	.20	8.5	.30
1.7 BAR	18.5	.14	24.2	.20	32.2	.30
50 PSI	4.4	.24	5.9	.32	8.0	.46
3.4 BAR	16.6	.24	22.3	.32	30.3	.46
75 PSI	4.1	.34	5.6	.44	7.6	.62
5.2 BAR	15.5	.34	21.2	.44	28.7	.62
100 PSI	3.8	.41	5.3	.56	7.3	.78
6.9 BAR	14.4	.41	20.1	.56	27.6	.78
125 PSI	3.5	.50	5.0	.68	7.0	.95
8.6 BAR	13.2	.50	18.9	.68	26.5	.95
150 PSI	3.3	.62	4.8	.78	6.7	1.1
10.3 BAR	12.5	.62	18.2	.78	25.4	1.1

Mnf Part #	Max GPM	Max LPM	Max PSI	Max BAR	Max RPM	Shaft Output		
						U.S	Metric	Shaft
4001C	9.1	34.4	150	10.3	1800	5⁄8"	15.9 mm	solid
4001C-H	9.1	34.4	150	10.3	1800	1⁄2"	12.7 mm	hollow
4001	9.1	34.4	150	10.3	1800	5⁄8"	15.9 mm	solid
4001N-H	9.1	34.4	150	10.3	1800	1⁄2"	12.7 mm	hollow
4001XL	9.1	34.4	150	10.3	1800	5⁄8"	15.9 mm	solid
4001XL-H	9.1	34.4	150	10.3	1800	1⁄2"	12.7 mm	hollow

Teflon® rollers - Add Suffix "T2" - (i.e.: 4001C-T2).
Polypropylene rollers - Add Suffix "T3" - (i.e.: 4001C-T3).
Reverse rotation* - Add Suffix "R" - (i.e.: 4001C-R).

How to order:
Specify Mfr Part #
Example: 4001C-H

Cast Iron, Ni-Resist or Silver Series XL

Series 4101 4 Roller

Features:

- Port size: 3⁄4" NPT
- Max. fluid temperature: 140°F/60°C
- Housing: Cast Iron (C), Ni-Resist (N) or Silvercast (XL)
- Pump shaft rotation: Clockwise when looking at the shaft end (counter clockwise available)
- Rollers: Super Rollers standard [Poly (T3) and Teflon® (T2)]
- Shaft Seals: Viton® standard
- Special torque arm and base kit is available for gas engines
- Rotor: Cast Iron, Ni-Resist or Silvercast
- Weight: 5 lbs./2.27 kg

Pressure in PSI and BAR	GPM LPM	HP HP	GPM LPM	HP HP	GPM LPM	HP HP
	@1800 RPM		@2200 RPM		@2600 RPM	
0 PSI	5.0	.11	6.2	.14	7.2	.16
0 BAR	18.9	.11	23.5	.14	27.3	.16
25 PSI	4.8	.21	5.8	.27	6.9	.30
1.7 BAR	18.1	.21	21.9	.27	26.1	.30
50 PSI	4.5	.34	5.6	.40	6.6	.46
3.4 BAR	17.0	.34	21.2	.40	25.0	.46
75 PSI	4.2	.45	5.4	.55	6.4	.62
5.2 BAR	15.9	.45	20.4	.55	24.2	.62
100 PSI	3.9	.56	5.0	.68	6.0	.76
6.9 BAR	14.8	.56	18.9	.68	22.7	.76
125 PSI	3.7	.68	4.7	.82	5.7	.92
8.6 BAR	14.0	.68	17.8	.82	21.6	.92
150 PSI	3.4	.78	4.4	.96	5.4	1.08
10.3 BAR	12.9	.78	16.6	.96	20.4	1.08

Mnf Part #	Max GPM	Max LPM	Max PSI	Max BAR	Max RPM	Shaft Output		
						U.S	Metric	Shaft
4101C	7.2	27.3	150	10.3	2600	5⁄8"	15.9 mm	solid
4101C-H	7.2	27.3	150	10.3	2600	1⁄2"	12.7 mm	hollow
4101N	7.2	27.3	150	10.3	2600	5⁄8"	15.9 mm	solid
4101N-H	7.2	27.3	150	10.3	2600	1⁄2"	12.7 mm	hollow
4101XL	7.2	27.3	150	10.3	2600	5⁄8"	15.9 mm	solid
4101XL-H	7.2	27.3	150	10.3	2600	1⁄2"	12.7 mm	hollow

Teflon® rollers - Add Suffix "T2" - (i.e.: 4101C-T2).
Polypropylene rollers - Add Suffix "T3" - (i.e.: 4101C-T3).
Reverse rotation* -Add Suffix "R" - (i.e.: 4101C-R).

How to order:
Specify Mfr Part #
Example: 4101C-H

Roller Pump

Ni-Resist or Silver Series XL

Series 4001 and 4101 12 volt DC 4 Roller

Features:

- Super Rollers and Viton® seals standard
- Locking collar and torque arm come in each package
- Rotor: Ni-Resist (N) or Silvercast (XL)
- Weight: 16-18 lbs./7.3-8.2 kg

PENTAIR
HYPRO® · SHURFLO®

Mfr Part #	Max GPM	Max LPM	Max PSI	Max BAR	Max RPM	Shaft Output		
						U.S	Metric	Shaft
4001N-EH	10.4	39.4	30	2.1	1900	1/2"	12.7 mm	hollow
4001N-E2H	9.9	37.5	50	3.4	1600	1/2"	12.7 mm	hollow
4001XL-EH	10.4	39.4	30	2.1	1900	1/2"	12.7 mm	hollow
4001XL-E2H	9.9	37.5	50	3.4	1600	1/2"	12.7 mm	hollow
4101N-EH	7.5	28.4	50	3.4	1900	1/2"	12.7 mm	hollow
4101N-E2H	5.9	22.3	90	6.2	1600	1/2"	12.7 mm	hollow
4101XL-EH	7.5	28.4	50	3.4	1900	1/2"	12.7 mm	hollow
4101XL-E2H	5.9	22.3	90	6.2	1600	1/2"	12.7 mm	hollow

Teflon® rollers - Add Suffix "T2" - (i.e.: 4001N-EHT2).
Polypropylene rollers - Add Suffix "T3" - (i.e.: 4001N-EHT3).

U.S. Units

Series 4101-EH and 4101-E2H	Model 4101N-EH & 4101XL-EH				Model 4101N-E2H & 4101XL-E2H		
	Volts	PSI	AMPS	GPM	PSI	AMPS	GPM
	12.0 (Battery) Engine Off	0	10.0	6.3	0	---	---
		5	11.3	6.0	10	8.4	5.3
		10	12.5	5.8	20	11.8	4.8
		15	13.7	5.6	30	13.7	4.65
		20	15.1	5.4	40	16.4	4.4
		25	16.7	5.2	50	19.6	4.05
		30	18.6	5.0	60	22.8	3.65
		35	20.3	4.8	70	25.8	3.20
		40	22.3	4.6	80	28.9	3.00
		45	24.1	4.4	90	31.5	2.75
		50	25.7	4.2	100	34.2	2.60
	13.5 (Alternator) Engine Running	0	10.4	7.5	0	---	---
		5	11.7	7.0	10	9.1	5.9
		10	13.0	6.6	20	11.2	5.6
		15	14.2	6.4	30	13.9	5.25
		20	15.8	6.2	40	16.9	5.0
		25	17.4	6.0	50	19.5	4.7
		30	19.6	5.8	60	22.7	4.35
		35	20.9	5.6	70	25.7	4.0
		40	22.5	5.4	80	29.2	3.6
		45	24.3	5.2	90	31.9	3.4
		50	26.1	5.0	100	34.8	3.2

U.S. Units

Series 4001-EH and 4001-E2H	Model 4001N-EH & 4001XL-EH				Model 4001N-E2H & 4001XL-E2H		
	Volts	PSI	AMPS	GPM	PSI	AMPS	GPM
	12.0 (Battery) Engine Off	0	12.6	9.0	10	13.9	8.4
		5	14.1	8.3	20	18.0	7.9
		10	15.2	8.1	30	22.2	7.2
		15	17.3	7.8	35	25.0	6.9
		20	19.7	7.2	40	27.0	6.5
		25	22.1	6.7	50	31.6	5.9
		30	24.8	6.2	60	36.2	5.4
	13.5 (Alternator) Engine Running	0	13.4	10.4	10	14.4	9.9
		5	14.8	9.9	20	18.3	9.1
		10	16.2	9.4	30	22.3	8.5
		15	18.2	8.9	35	24.5	8.3
		20	20.5	8.5	40	27.0	8.0
		25	22.5	8.2	50	31.0	7.3
		30	24.9	7.7	60	36.1	6.8

How to order:
Specify Mfr Part #
Example: 4001N-EH

Westward Parts can source many other special order items that are not listed in this catalogue, please visit our website at westwardparts.com or call us directly at 1-888-937-7278. Our team will help you find what you need.
The product images shown are for illustration purposes only and may not be an exact representation of the product.

Roller Pump

Cast Iron, Ni-Resist or Silver Series XL

PENTAIR
HYPRO® · SHURFLO®

Series 6500 6-Roller

Features:

- Port size: 3⁄4" NPT
- 1" hose barb inlet fitting for 1000 rpm operation
- Max. fluid temperature: 140°F/60°C
- Housing: Cast Iron (C), Ni-Resist (N) or Silvercast (XL)
- Shaft rotation: Counter clockwise when lookng at the shaft end (clockwise available)
- Rollers: Super Rollers standard [Poly (T3) and Teflon® (T2)]
- Shaft Seals: Viton® standard
- Recommended PTO torque arm kit 3430-0540
- Rotor: Cast Iron, Ni-Resist or Silvercast
- Weight: 9 lbs./4.1 kg

Pressure in PSI and BAR	GPM	HP	GPM	HP	GPM	HP
	LPM	HP	LPM	HP	LPM	HP
	@540 RPM		@1000 RPM		@1200 RPM	
0 PSI	9.7	.08	18.2	.20	21.8	.30
0 BAR	36.7	.08	68.9	.20	82.5	.30
50 PSI	8.0	.38	16.5	.71	20.1	.90
3.4 BAR	30.3	.38	62.4	.71	76.1	.90
100 PSI	7.2	.68	15.4	1.26	19.1	1.51
6.9 BAR	27.3	.68	58.3	1.26	72.3	1.51
150 PSI	6.6	.97	14.7	1.80	18.2	2.14
10.3 BAR	25	.97	55.6	1.80	68.9	2.14
200 PSI	5.6	1.29	14.0	2.34	17.3	2.84
13.8 BAR	21.2	1.29	53	2.34	65.5	2.84
250 PSI	4.9	1.65	13.4	2.91	16.5	3.48
17.2 BAR	18.5	1.65	50.7	2.91	62.4	3.48
300 PSI	4.3	1.91	12.7	3.47	15.7	4.17
20.7 BAR	16.3	1.91	48.1	3.47	59.4	4.17

Mnf Part #	Max GPM	Max LPM	Max PSI	Max BAR	Max RPM	Shaft Output		
						U.S	Metric	Shaft
6500C	21.8	82.5	300	20.7	1200	5⁄8"	15.9 mm	solid
6500N	21.8	82.5	300	20.7	1200	5⁄8"	15.9 mm	solid
6500XL	21.8	82.5	300	20.7	1200	5⁄8"	15.9 mm	solid

Teflon® rollers - Add Suffix "T2" - (i.e.: 6500C-T2).
Polypropylene rollers - Add Suffix "T3" - (i.e.: 6500C-T3) .
Reverse rotation*- Add Suffix "R" - (i.e.: 6500C-R).

How to order:
Specify Mfr Part #
Example: 6500C

Series 7560 8-Roller

Features:

- Super Rollers (standard) provide premium wear and life with Poly and PTFE options available for superior chemical resistance
- Viton® seals offer the best overall chemical resistance
- Clockwise shaft rotation available for coupling to gas engines
- Counter-clockwise shaft rotation is available for PTO adaption
- 15/16" solid stainless steel shaft resists corrosion
- Cast Iron pumps lasted to 140 hours before failure
- Ni-Resist pumps lasted to 332 hours before failure
- Silver Series XL pumps ran over 1000 hours and still met new pump specs!

Pressure and BAR	LPM	HP	LPM	HP	LPM	HP
	@540 RPM		@800 RPM		@1000 RPM	
0 BAR	45,4	,33	69,3	,89	85,2	1,56
3,4 BAR	42	,74	66,2	1,26	83,3	1,78
6,9 BAR	39	1,25	64	1,95	80,6	2,53
10,3 BAR	36	1,77	60,9	2,65	78	3,5
13,8 BAR	32,5	2,26	58,7	3,4	75,7	4,2
17,2 BAR	29,5	2,78	54,9	4,2	71,5	5,3
20,7 BAR	26,9	3,3	51,9	5,3	68,1	6,1

* CCW (counterclockwise) and CW (clockwise) are determined when looking at the shaft end.

Mnf Part #	Max LPM	Max BAR	Max RPM	Shaft Output
7560C	85	20,6	1200	15⁄16 inch solid shaft (23,8 mm)
7560N				
7560XL				

Teflon rollers - Add Suffix "T2" - (i.e.: 7560C-T2).
Polypropylene rollers - Add Suffix "T3" - (i.e.: 7560C-T3).
Buna-N seals - Add Suffix "M" - (i.e.: 7560C-M).
Reverse rotation*- Add Suffix "R" - (i.e.: 7560C-R).

How to order:
Specify Mfr Part #
Example: 7560C

Roller Pump

Hydraulically-Driven Cast Iron, Ni-Resist or Silver Series

PENTAIR
HYPRO® · SHURFLO®

Series 7560-GM30, 7560-GM15 8-Roller

Features:

- Hydraulic motor drive (for open center, closed center and load-sensing systems)
- Max. fluid temperature: 140°F/60°C
- Pump port size: 3⁄4" NPT
- 1" hose barb inlet fitting for 1000 rpm operation
- Housing: Cast Iron (C), Ni-Resist (N) or Silvercast (XL)
- Rollers: Super Rollers standard [Poly (T3) and Teflon® (T2)]
- Shaft Seals: Viton® standard
- Rotor: Cast Iron, Ni-Resist or Silvercast
- Motor port size: -10 SAE (7⁄8"- 14" UNF)

Mfr Part #	Max GPM	Max LPM	Max PSI	Max BAR	Max RPM	Motor Capacity Hydraulic Flow Max	
						US	Metric
7560C-GM30	20.8	78.7	300	20.7	1000	12 gpm	45 lpm
7560N-GM30	20.8	78.7	300	20.7	1000	12 gpm	45 lpm
7560XL-GM30	20.8	78.7	300	20.7	1000	12 gpm	45 lpm
7560C-GM15	20.1	76.1	300	20.7	1000	6 gpm	23 lpm
7560N-GM15	20.1	76.1	300	20.7	1000	6 gpm	23 lpm
7560XL-GM15	20.1	76.1	300	20.7	1000	6 gpm	23 lpm

Teflon® rollers - Add Suffix "T2" - (i.e.: 7560C-GM30-T2).
Polypropylene rollers - Add Suffix "T3" - (i.e.: 7560C-GM30-T3).

How to order:
Specify Mfr Part #
Example: 7560C-GM30

7560C,N,XL-GM15

U.S. Units

Hyd.GPM	GPM at									
	0 PSI	25 PSI	50 PSI	75 PSI	100 PSI	125 PSI	150 PSI	200 PSI	250 PSI	300 PSI
3	10.6	9.4	8.5	7.7	7.1	6.5	5.8	4.8	3.2	1.6
4	14.1	13.1	12.0	11.3	10.6	10.0	9.3	8.3	6.9	5.2
5	17.4	16.6	15.7	15.0	14.4	13.5	13.2	11.8	10.3	8.7

7560C,N,XL-GM30

U.S. Units

Hyd. GPM	GPM at									
	0 PSI	25 PSI	50 PSI	77 PSI	100 PSI	125 PSI	150 PSI	200 PSI	250 PSI	300 PSI
5	9.0	8.5	7.8	7.3	6.7	6.1	5.5	4.4	3.3	2.2
6	10.5	10.0	9.5	8.9	8.4	7.8	7.3	6.2	5.2	4.1
7	11.9	11.5	11.0	10.4	9.9	9.4	8.9	7.8	6.8	5.7
8	13.7	13.1	12.5	12.0	11.5	10.9	10.4	9.4	8.4	7.3
9	15.2	14.6	14.1	13.6	13.1	12.6	12.1	11.1	10.0	9.1
10	16.9	16.5	15.9	15.4	14.9	14.3	13.9	12.9	11.9	11.0
11	18.6	18.2	17.6	17.1	16.6	16.1	15.6	14.7	13.8	12.9
12	20.1	19.6	19.1	18.6	18.1	17.6	17.1	16.3	15.3	14.5

Westward Parts can source many other special order items that are not listed in this catalogue, please visit our website at westwardparts.com or call us directly at 1-888-937-7278. Our team will help you find what you need.
The product images shown are for illustration purposes only and may not be an exact representation of the product.

Roller Pump

Cast Iron, Ni-Resist or Silver Series XL

PENTAIR
HYPRO® · SHURFLO®

Series 7700 7-Roller

Features:

- Max. fluid temperature: 140°F/60°C
- Port size: 3/4" NPT
- Housing: Cast Iron (C), Ni-Resist (N) or Silvercast (XL)
- Shaft rotation: Counter clockwise when looking at the shaft end (Clockwise available)
- Rollers: Super Rollers standard [Poly (T3) and Teflon® (T2)]
- Shaft Seals: Viton® standard
- Recommended PTO torque arm kit 3430-0540
- Rotor: Cast Iron, Ni-Resist or Silvercast
- Weight: 14 lbs./6.36 kg

Pressure in PSI and BAR	GPM	HP	GPM	HP	GPM	HP
	LPM	HP	LPM	HP	LPM	HP
	@540 RPM		@600 RPM		@800 RPM	
0 PSI	14.2	.23	15.3	.28	22.1	.37
0 BAR	53.7	.23	57.9	.28	83.6	.37
50 PSI	12.9	.56	14.0	.62	20.7	.86
3.4 BAR	48.8	.56	53	.62	78.3	.86
100 PSI	11.9	1.10	13.0	1.20	19.5	1.66
6.9 BAR	45	1.10	49.2	1.20	73.8	1.66
150 PSI	11.2	1.64	12.3	1.80	18.6	2.40
10.3 BAR	42.4	1.64	46.6	1.80	70.4	2.40
200 PSI	10.3	2.22	11.6	2.44	17.8	3.26
13.8 BAR	39	2.22	43.9	2.44	67.4	3.26

Mfr Part #	Max GPM	Max LPM	Max PSI	Max BAR	Max RPM	Shaft Output		
						U.S	Metric	Shaft
7700C	22.1	83.7	200	13.8	800	15/16"	23.8 mm	solid
7700N	22.1	83.7	200	13.8	800	15/16"	23.8 mm	solid
7700XL	22.1	83.7	200	13.8	800	15/16"	23.8 mm	solid

Teflon® rollers - Add Suffix "T2" - (i.e.: 7700C-T2).
Polypropylene rollers - Add Suffix "T3" - (i.e.: 7700C-T3).
Reverse rotation* - Add Suffix "R" - (i.e.: 7700C-R).

How to order:
Specify Mfr Part #
Example: 7700C

Series 1700 5-Roller

Features:

- Max. fluid temperature: 140°F/60°C
- Port size: 1" NPT (BSP available on 1700C)
- Housing: Cast Iron (C), Ni-Resist (N) or Silvercast (XL)
- Shaft rotation: Counter clockwise when looking at the shaft end (Clockwise available)
- Rollers: Super Rollers standard [Poly (T3) and Teflon® (T2) available]
- Shaft Seals: Viton® standard
- Recommended PTO torque arm kit 3430-0540
- Rotor: Cast Iron, Ni-Resist or Silvercast
- Weight: 19 lbs./8.6 kg

Pressure in PSI and BAR	GPM	HP	GPM	HP	GPM	HP
	LPM	HP	LPM	HP	LPM	HP
	@540 RPM		@600 RPM		@1000 RPM	
0 PSI	25.0	2.7	28.0	.34	45.0	1.42
0 BAR	94.6	2.7	106	.34	170	1.42
50 PSI	21.0	1.18	24.5	1.39	43.0	3.0
3.4 BAR	79.5	1.18	92.7	1.39	163	3.0
100 PSI	19.0	2.13	22.0	2.36	41.0	4.67
6.9 BAR	71.9	2.13	83.3	2.36	155	4.67
150 PSI	17.0	2.89	20.0	3.34	39.0	6.07
10.3 BAR	64.3	2.89	75.7	3.34	148	6.07
200 PSI	15.0	3.85	18.0	4.39	----	----
13.8 BAR	56.8	3.85	681	4.39	----	----

Mnf Part #	Max GPM	Max LPM	Max PSI	Max BAR	Max RPM	Shaft Output		
						U.S	Metric	Shaft
1700C*	45	170	200	13.8	1000	15/16"	23.8 mm	solid
1700N	45	170	200	13.8	1000	15/16"	23.8 mm	solid
1700XL	45	170	200	13.8	1000	15/16"	23.8 mm	solid

* BSP Version - 1700C-BT
Teflon® rollers - Add Suffix "T2" - (i.e.: 1700C-T2).
Polypropylene rollers - Add Suffix "T3" - (i.e.: 1700C-T3).
Reverse rotation*- Add Suffix "R" - (i.e.: 1700C-R).

How to order:
Specify Mfr Part #
Example: 1700N

Teflon® is a registered trademark of E.I. DuPont de Nemours and Co.
Viton® is a registered trademark of DuPont. Hypro® is a registered trademark of Pentair.

Westward Parts can source many other special order items that are not listed in this catalogue, please visit our website at westwardparts.com or call us directly at 1-888-937-7278. Our team will help you find what you need.
The product images shown are for illustration purposes only and may not be an exact representation of the product.

Roller Pump

Cast Iron, Ni-Resist or Silver Series XL

PENTAIR
HYPRO® · SHURFLO®

Series 1502 6-Roller

Features:

- Max. fluid temperature: 140°F/60°C
- Port size: 1-1⁄2" NPT (BSP available on 1502C)
- Housing: Cast Iron (C), Ni-Resist (N) or Silvercast (XL)
- Shaft rotation: Counter clockwise when looking at the shaft end (Clockwise available)
- Rollers: Super rollers standard [Poly (T3) available]
- Shaft Seals: Buna-N standard on Cast Iron and Ni-Resist [Viton (Q) available]; Viton® standard on Silver Series XL
- Available PTO adapters (forged steel recommended)
- Recommended PTO Torque Arm Kit 3430-0540
- Rotor: Cast Iron, Ni-Resist or Silvercast
- Weight: 30 lbs./13.6 kg

Pressure in PSI and BAR	GPM	HP	GPM	HP	GPM	HP
	LPM	HP	LPM	HP	LPM	HP
	@540 RPM		@600 RPM		@1000 RPM	
0 PSI	33.1	.51	36.8	.66	62.1	2.02
0 BAR	125	.51	139	.66	235	2.02
25 PSI	29.7	1.02	33.6	1.15	58.5	3.04
1.7 BAR	112	1.02	127	1.15	221	3.04
50 PSI	27.8	1.45	31.7	1.68	56.9	3.69
3.4 BAR	105	1.45	120	1.68	215	3.69
100 PSI	24.3	2.46	28.3	2.78	53.9	5.31
6.9 BAR	92	2.46	107	2.78	204	5.31
150 PSI	21.0	3.54	25.0	3.95	50.9	7.12
10.3 BAR	79.5	3.54	94.6	3.95	193	7.12

Mfr Part #	Max GPM	Max LPM	Max PSI	Max BAR	Max RPM	Shaft Output		
						U.S	Metric	Shaft
1502C*	62	235	200	13.8	1000	15/16"	23.8 mm	solid
1502N	62	235	200	13.8	1000	15/16"	23.8 mm	solid
1502XL	62	235	200	13.8	1000	15/16"	23.8 mm	solid

*BSP Version - 1502C-BT
Teflon® rollers - Add Suffix "T2" - (i.e.: 1502C-T2).
Polypropylene rollers - Add Suffix "T3" - (i.e.: 1502C-T3).
Reverse rotation* - Add Suffix "R" - (i.e.: 1502C-R).

How to order:
Specify Mfr Part #
Example: 1502N

Models: 4101C-25, 4101XL-25

- 2.5 HP PowerPro Engine (CARB/EPA approved)
- Port size: 3⁄4" NPT
- Housing: Cast Iron (C) or Silvercast (XL)
- Rollers: Super rollers standard [Poly (T3) and Teflon® (T2)]
- Shaft Seals: Viton® standard
- Rotor: Cast Iron (C) or Silvercast (XL)
- Weight: 29 lbs./13.1 kg

Pressure in PSI and BAR	GPM
BAR	LPM
0 PSI	8.9
0 BAR	34
50 PSI	8.6
3.4 BAR	33
100 PSI	8.3
6.9 BAR	31
150 PSI	8.0
10.3 BAR	30

Mfr Part #	Max GPM	Max LPM	Max PSI	Max BAR	Engine Mfgr. & HP
4101C-25	8.9	34.7	100	6.9	PowerPro 2.5 hp
4101XL-25	8.9	34.7	150	10.3	PowerPro 2.5 hp

How to order:
Specify Mfr Part #
Example: 4101C-25

Teflon® is a registered trademark of E.I. DuPont de Nemours and Co.
Viton® is a registered trademark of DuPont. Hypro® is a registered trademark of Pentair.

Westward Parts can source many other special order items that are not listed in this catalogue, please visit our website at westwardparts.com or call us directly at 1-888-937-7278. Our team will help you find what you need.
The product images shown are for illustration purposes only and may not be an exact representation of the product.

Roller Pump Kits & Accessories

Roller Pump Accessory Selection Guide

PENTAIR
HYPRO® · SHURFLO®

Description	Series 1500	Series 1700	Series 6500	Series 7560	Series 7700	Series 4000	Series 5200
540 rpm 1-3/8" Forged Steel PTO Adapter	1320-0076	1320-0076	1320-0077	1320-0076	1320-0076	-------	1320-0081
1000 rpm 1-3/8" Forged Steel PTO Adapter	1320-0078	1320-0078	1320-0079	1320-0078	-------	1320-0079	-------
1000 rpm 1-3/4" Forged Steel PTO Adapter	1320-0080	1320-0080	-------	1320-0080	-------	-------	-------
540 rpm 1-3/8" Forged Steel Quick Coupler	1323-0072	1323-0072	1323-0074	1323-0072	1323-0072	-------	-------
1000 rpm 1-3/8" Forged Steel Quick Coupler	1323-0073	1323-0073	1323-0075	1323-0073	-------	-------	-------
Multi-Speed 1-3/8" Forged Steel Quick Coupler	1323-0076	1323-0076	1323-0077	1323-0076	1323-0076	1323-0077	-------
Steel Shaft Adapter 3/4" x 5/8	-------	-------	1320-0015	-------	-------	1320-0015	-------
Steel Shaft Adapter 5/8" x 5/8	-------	-------	1320-0016	-------	-------	1320-0016	-------
Repair Kits	3430-0387 3430-0386	3430-0437	3430-0380	3430-0381	3430-0384	3430-0390	-------
Torque Arm Kit	-------	3430-0540	3430-0540	3430-0540	3430-0540	-------	-------
Base Kits	3420-0004	3420-0010	3420-0023	3420-0003	3420-0010	3420-0024* 3420-0025**	-------
Hydraulic Flange Kit	-------	-------	-------	3430-0636	-------	-------	-------

* For electric motor drive 3 1/2" shaft centerline (4001, 4101).
** For gas engine drive 43/16" shaft centerline (4101 only).

Roller Repair Kits

Mfr Part #	Pump Series	Description	Estimated Weight Ea.	
			US Units	Metric Units
3430-0387	1502C and 1502N	Roller kit includes: 6 Super Rollers, 1 o-ring gasket, and 2 Buna-N seals	1 lb. 7 oz.	652 g
3430-0386	1502XL	Roller kit includes: 6 Super Rollers, 1 o-ring gasket, and 2 Viton® seals	1 lb. 8 oz.	680 g
3430-0437	1700	Roller kit includes: 5 Super Rollers, 1 o-ring gasket, and 2 Viton® seals	1 lb. 5 oz.	595 g
3430-0380	6500	Roller kit includes: 6 Super Rollers, 1 o-ring gasket, and 2 Viton® seals	8 oz.	227 g
3430-0381	7560/7700	Roller kit includes: 8 Super Rollers, 1 o-ring gasket, and 2 Viton® seals	12 oz.	340 g
3430-0390	4001/4101	Roller kit includes: 4 Super Rollers, 1 o-ring gasket, and 2 Viton® seals	3 oz.	85 g

Base Kits

Mfr Part #	Pump Series	Description	Estimated Weight Ea.	
			US Units	Metric Units
3420-0025	4101	Base kit for mounting to gas engine, 4-3/16" shaft centerline. Base kit includes: 1 Base, 2 Bolts and 2 Lock washers	12 oz.	340 g
3420-0024	4001/4101	Base kit for mounting to an electric motor, 3-1/2" shaft centerline. Base kit includes: 1 Base, 2 Bolts and 2 Lock washers	7 oz.	198 g
3420-0023	6500	Base kit includes: 1 Base, 2 Bolts and 2 Lock washers	12 oz.	340 g
3420-0003	7560	Base kit includes: 1 Base, 3 Bolts and 3 Lock washers	1 lb. 10 oz.	737 g
3420-0010	7700/1700	Base kit includes: 1 Base and 4 Bolts	14 oz.	397 g
3420-0004	1500	Base kit includes: 1 Base and 4 Bolts	6 lbs.	2.7 kg

Roller Pump Repair Tools and Tool Kits

Mfr Part #	Pump Series	Description
3011-0006	6500	Tool Kit
3011-0021	4001/4101	Tool Kit
3010-0001†	1700, 6500, 7560, 7700	Support fixture
3010-0002†	1700, 6500, 7560, 7700	Support fixture
3010-0003†	4001/4101, 6500	Bearing and seal assembly tool
3010-0004†	4001/4101, 6500	Bearing disassembly tool
3010-0005	1500, 1700, 7560, 7700	Bearing and seal assembly tool
3010-0006	1500, 1700, 7560, 7700	Bearing disassembly tool
3010-0010*†	4001/4101, 6500	Bearing support tool
3010-0014*†	4001/4101, 6500	Bearing race support tool
3010-0020	1500, 1700, 7560, 7700	Bearing support tool
3010-0066*†	1500, 1700, 4001/4101, 6500, 7560, 7700	Wire brush
3010-0067*†	1500, 1700, 4001/4101, 6500, 7560, 7700	Wire brush holder
3010-0068*†	1500, 1700, 4001/4101, 6500, 7560, 7700	Tool Box
3020-0009*†	1500, 1700, 4001/4101, 6500, 7560, 7700	Allen wrench; 1/16" hex

* Included in 3011-0006 - Tool kit for 6500 series roller pumps.
† Included in 3011-0021 - Tool kit for 4001/4101 series roller pumps.

How to order:
Specify Mfr Part #
Example: 3420-0025

Roller Pump Kits & Accessories

PTO and Shaft Adapters
(Female to Female)

PENTAIR
HYPRO® · SHURFLO®

Mfr Part #	US PTO (I.D.)	Metric PTO (I.D.)	US Pump End (I.D.)	Metric Pump End (I.D.)	Material	RPM	Pump Model
1320-0015	3/4"	19 mm	5/8"	19 mm	steel	*	4000, 6500
1320-0016	5/8"	15.9 mm	5/8"	15.9 mm	steel	*	4000, 6500
1320-0054	3/4"	19 mm	15/16"	23.8 mm	die cast	*	1500, 1700, 7560, 7700
1320-0076	1-3/8" (6 spline)	34.9 mm (6 spline)	15/16"	23.8 mm	forged steel	540	1500, 1700, 7560, 7700
1320-0077	1-3/8" (6 spline)	34.9 mm (6 spline)	5/8	34.9 mm	forged steel	540	6500
1320-0078	1-3/8" (21 spline)	34.9 mm (21 spline)	15/16"	23.8 mm	forged steel	1000	1500, 1700, 7560
1320-0079	1-3/8" (21 spline)	34.9 mm (21 spline)	5/8"	34.9 mm	forged steel	1000	4000, 6500
1320-0080	1-3/4" (20 spline)	44.5 mm (20 spline)	15/16"	23.8 mm	forged steel	1000	1500, 1700, 7560
1320-0081	1-3/8" (6 spline)	34.9 mm (6 spline)	1"	34.9 mm	forged steel	540	5200
1320-0082	1-1/2" (8 spline)	38 mm (8 spline)	15/16"	23.8 mm	forged steel	1000	1500, 1700, 7560
1320-0083	1-1/2" (8 spline)	38 mm (8 spline)	5/8"	34.9 mm	forged steel	1000	4000, 6500

* Refer to recommended pump rpm.

How to order:
Specify Mfr Part #
Example: 3420-0025

Quick Couplers
(Female to Female)

Mfr Part #	PTO (I.D.) US	PTO (I.D.) Metric	Pump End (I.D.) US	Pump End (I.D.) Metric	Material	RPM	Pump Model
1323-0072	1-3/8" (6 spline)	34.9 mm (6 spline)	15/16	23.8 mm	forged steel	540	1500,1700, 7560, 7700
1323-0073	1-3/8" (21 spline)	34.9 mm (21 spline)	15/16"	23.8 mm	forged steel	1000	1500, 1700, 7560
1323-0074	1-3/8" (6 spline)	34.9 mm (6 spline)	5/8"	15.9 mm	forged steel	540	6500
1323-0075	1-3/8" (21 spline)	34.9 mm (21 spline)	5/8"	15.9 mm	forged steel	1000	4000, 6500
1323-0076*	1-3/8" (multi-speed)	34.9 mm (multi-speed)	15/16"	23.8 mm	forged steel	540/1000	1500, 1700, 7560, 7700
1323-0077*	1-3/8" (multi-speed)	34.9 mm (multi-speed)	5/8"	15.9 mm	forged steel	540/1000	4000, 6500
1323-0078	1-1/2" (8 spline)	38 mm (8 spline)	5/8"	15.9 mm	forged steel	1000	4000, 6500
1323-0079	1-1/2" (8 spline)	38 mm (8 spline)	15/16"	23.8 mm	forged steel	1000	1500, 1700, 7560

* Multi-speed couplers are compatable with both 6 and 21 spline PTO shafts.

How to order:
Specify Mfr Part #
Example: 1323-0072

Torque Arm Kit (pump not included)

Mfr Part #	Material	RPM	For Pump Series	Estimated Weight Each US Units	Estimated Weight Each Metric
3430-0540	steel	540/1000	1502, 1700, 6500, 7560, and 7700	2 lbs. 4 oz.	1.02 kg

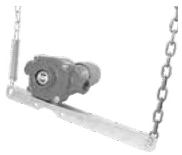

Westward Parts can source many other special order items that are not listed in this catalogue, please visit our website at westwardparts.com or call us directly at 1-888-937-7278. Our team will help you find what you need.
The product images shown are for illustration purposes only and may not be an exact representation of the product.

Other Pump Accessories

Couplers

PENTAIR
HYPRO® · SHURFLO®

Series	Mfr Part #	Description	Estimated Weight Each	
			US Units	Metric
2738 (2.0 hp limit)*	2738-1001	1/2" coupling end, with 1/8" keyway	6 oz.	170 g
	2738-1002	5/8" coupling end, with 3/16" keyway	6 oz.	170 g
	2738-1003	3/4" coupling end, with 3/16" keyway	6 oz.	170 g
	2738-1004	7/8" coupling end, with 3/16" keyway	6 oz.	170 g
Replaces L-075	2728-1001	Center disc	1 oz.	28 g
2739 (5.0 hp limit)*	2739-1001	5/8" coupling end, with 3/16" keyway	11 oz.	312 g
	2739-1002	3/4" coupling end, with 3/16" keyway	11 oz.	312 g
	2739-1003	7/8" coupling end, with 3/16" keyway	11 oz.	312 g
	2739-1004	15/16" coupling end, with 1/4" keyway	11 oz.	312 g
	2739-1005	1" coupling end, with 1/4" keyway	11 oz.	312 g
	2739-1006	1-1/8" coupling end, with 1/4" keyway	11 oz.	312 g
	2739-1009	24 mm coupling end, with 8mm keyway	11 oz.	312 g
	2729-1001	Center disc	1 oz.	28 g
Replaces L-095	2729-1005	Heavy-duty center disc, urethane material	1 oz.	28 g
2741 (10.5 hp limit)*	2741-1001	3/4" coupling end, with 3/16" keyway	1 lb. 5 oz.	595 g
	2741-1004	15/16" coupling end, with 1/4" keyway	1 lb. 5 oz.	595 g
	2741-1002	1" coupling end, with 1/4" keyway	1 lb. 5 oz.	595 g
	2741-1005	1-1/4" coupling end, with 1/4" keyway	1 lb. 5 oz.	595 g
	2741-1007	1-3/8" coupling end, with 5/16" keyway	1 lb. 5 oz.	595 g
	2741-1003	1-1/8" coupling end, with 1/4" keyway	1 lb. 5 oz.	595 g
	2729-1002	Center disc	1 oz.	28 g
Replaces L-100	2729-1006	heavy-duty center disc, urethane material	1 oz.	28g
2740 (18.0 hp limit)*	2740-1001	3/4" coupling end, with 3/16" keyway	3 lbs. 11 oz.	1.67 kg
	2740-1002	1" coupling end, with 1/4" keyway	3 lbs. 8 oz.	1.59 kg
	2740-1005	1-3/8" coupling end, with 5/16" keyway	3 lbs.	1.4 kg
	2740-1007	1-1/8" coupling end, with 1/4" keyway	2 lbs. 15 oz.	1.33 kg
Replaces L-110	2729-1003	Center disc	3 oz.	85 g

* HP limit is electric motor hp at 1725 rpm for driving a steady uniform load. For an uneven load, stop-start and moderate shock loads, divide hp by a 1.5 service factor.

Inches	mm
1/8"	3.2 mm
3/16"	4.7 mm
1/4"	6.4 mm
1/2"	13 mm
5/8"	15.9 mm
3/4"	19 mm
7/8"	22.2 mm
15/16"	23.8 mm
1"	25.4 mm
1-1/8"	28.6 mm

Note:
These couplers are designed for inch dimensional shafts and keys. Metric dimensions are for reference only (except for 2739-1009).

Ordering Instructions:
To order one 1/2" x 3/4" Series 2738 coupling, specify the following:
Note: It is not necessary to order in complete sets, parts can be ordered individually.

Quantity	Mfr Part #	Description
1	2738-1001	1/2" coupling end
1	2738-1003	3/4" coupling end
1	2728-1001	Center disc

Relief Valves

Mfr Part #	Ports-NPT Inlet (M) Oultet (F)	Max. PSI	Max. BAR	Body Material	Valve Material	Estimated Weight Each	
						US Units	Metric
3300-0002	1/2" M x 1/2" F	200	14	cast bronze	stainless steel ball	10 oz.	283 g
3300-0001	3/4" M x 3/4" F	400	28	cast bronze	stainless steel ball	1 lb. 1 oz.	482 g
3301-0001	3/4" M x 3/4" F	400	28	cast bronze	flat neoprene	1 lb. 2 oz.	510 g
3300-0093	3/4" M x 3/4" F	300	20	cast bronze	stainless steel ball	1 lb. 2 oz.	510 g
3300-0094	1" M x 3/4" F	150	10	cast bronze	stainless steel ball	1 lb. 4 oz.	567 g
3316-0002	1-1/4"	200	14	cast iron	stainless steel cone	2 lbs. 14 oz.	1.3 kg
3300-0015	3/4" M - 3/4" F	150	10	nylon	nylon	6 oz.	170 g
3300-0016	3/4" M - 3/4" F	250	17	nylon	nylon	6 oz.	170 g
3300-0098	3/4" M - 3/4" F	400	28	nylon	nylon	6 oz.	170 g

How to order:
Specify Mfr Part #
Example: 2738-1001

Diaphragm Pumps

Pumps

Low Pressure, 6 Diaphragm

Model 9910-D250

PENTAIR
HYPRO® · SHURFLO®

Features:

- Max. fluid temperature: 140°F/60°C
- Port sizes: 2" inlet, 1-1/2" outlet, hose barb
- Diaphragms: 6, semi-hydraulic, Desmopan® standard, Buna available
- Housing components for liquid handling: epoxy coated
- Mounting base: included
- Pump shaft rotation: CW and CCW
- Recommended control unit: 3300-0082
- Weight: 92 lbs./41.7 kg

Pressure in PSI and BAR	GPM LPM	HP HP	GPM LPM	HP HP	GPM LPM	HP HP	GPM LPM	HP HP	GPM LPM	HP HP
	@350 RPM		@400 RPM		@450 RPM		@500 RPM		@550 RPM	
0 PSI	42.7	0.71	48.3	0.90	54.3	1.22	59.8	1.60	65.7	2.01
0 BAR	161.2	0.71	182.5	0.90	204.8	1.22	225.7	1.60	248.1	2.01
72 PSI	41.4	2.33	47.2	2.73	52.7	3.10	58.1	3.45	63.3	3.88
5 BAR	156.1	2.33	178.2	2.73	198.9	3.10	219.4	3.45	239.0	3.88
145 PSI	40.1	4.09	45.9	4.73	52.1	5.27	56.6	6.02	61.3	6.45
10 BAR	151.4	4.09	173.1	4.73	196.4	5.27	213.8	6.02	231.2	6.45
217 PSI	39.3	5.70	45.1	6.58	50.7	7.45	55.5	8.32	60.2	9.22
15 BAR	148.5	5.70	170.0	6.58	191.5	7.45	209.5	8.32	227.1	9.22
290 PSI	38.8	7.52	44.5	8.45	50.1	9.66	54.8	10.89	59.2	11.54
20 BAR	146.4	7.52	167.9	8.45	189.0	9.66	206.9	10.89	223.4	11.54

All HP requirements listed in the table are electrical. For approximate gasoline equivalent, multiply by 1.3.

Mfr Part #	Max GPM	Max LPM	Max PSI	Max BAR	Max RPM	Shaft Output
9910-D250	65.7	248.7	290	20	550	1-3/8"- 6 splined male shaft

How to order:
Specify Mfr Part #
Example: 9910-D250

Diaphragm Pumps

Pumps

Medium Pressure, 2 Diaphragm

Model 9910-D30, D30AP-A, D30GRGI and D30-B-GRGI

PENTAIR
HYPRO® · SHURFLO®

Features:

- Max. fluid temperature: 140°F/60°C
- Shaft: flanged for shaft kit (D30); flanged w/ 3/4" shaft ext. (D30AP-A); 3/4" hollow shaft for gas engine mount (D30GRGI)
- Diaphragms: 2, semi-hydraulic, Desmopan® standard, Buna available
- Housing components for liquid handling: epoxy-coated
- Pump shaft rotation: CW and CCW
- Weight: 23 lbs./10.4 kg (D30); 33 lbs./15.0 kg (D30GRGI and D30-B-GRGI); 24 lbs./10.9 kg (D30AP-A)

Pressure in PSI and BAR	GPM LPM	HP HP	GPM LPM	HP HP	GPM LPM	HP HP	GPM LPM	HP HP	GPM LPM	HP HP
	@350 RPM		@400 RPM		@450 RPM		@500 RPM		@550 RPM	
0 PSI	6.1	0.13	6.9	0.16	7.8	0.19	8.7	0.24	9.6	0.28
0 BAR	23.0	0.13	26.1	0.16	29.5	0.19	32.8	0.24	36.2	0.28
145 PSI	5.7	0.55	6.6	0.66	7.2	0.76	8.1	0.85	9.3	0.90
10 BAR	21.4	0.55	24.9	0.66	27.3	0.76	30.6	0.85	34.9	0.90
290 PSI	5.6	1.00	6.3	1.14	7.1	1.29	7.8	1.47	8.8	1.64
20 BAR	21.0	1.00	23.7	1.14	26.7	1.29	29.5	1.47	33.4	1.64
465 PSI	5.5	1.46	5.9	1.67	6.9	1.89	7.7	2.06	8.6	2.27
30 BAR	20.6	1.46	22.4	1.67	26.0	1.89	29.0	2.06	32.5	2.27
580 PSI	5.2	1.90	5.8	2.11	6.8	2.41	7.5	2.71	8.3	2.94
40 BAR	19.5	1.90	22.1	2.11	25.8	2.41	28.2	2.71	31.4	2.94

All HP requirements listed in the table are electrical.
For approximate gasoline equivalent, multiply by 1.3.

Mfr Part #	Max GPM	Max LPM	Max PSI	Max BAR	Max RPM	Port Size
9910-D30	9.6	36.3	580	40	550	1" HB inlet, 1/2" HB outlet
9910-D30AP-A	Same pump as 9910-D30 with 3/4" solid thru shaft					
9910-D30GRGI	9.6	36.3	580	40	3600	Assembled with gearbox 9910-KIT1640 and control 9910-GS40GI for mounting on 5 hp gas engine
9910-D30-B-GRGI	Same pump as 9910-D30GRGI with Buna-N diaphragms					
D30HRGI	9.6	36.3	580	40	3600	Assembled with gearbox 8000-0056 and control 9910-GS40GI for mounting on 5 hp gas engine

How to order:
Specify Mfr Part #
Example: 9910-D30

Diaphragm Pumps

High Pressure, 4 Diaphragm

Model 9910-D1064 and D1064GRGI

PENTAIR
HYPRO® · SHURFLO®

Features:

- Max. fluid temperature: 140°F/60°C
- Shaft: Flanged adapter and 1-3⁄8”- 6 splined male shaft ext. (D1064); 1” hollow shaft for gas engine mount (D1064GRGI)
- Diaphragms: 4, semi-hydraulic, Desmopan® standard, Buna available
- Housing: anodized aluminum
- Mounting base: included
- Pump shaft rotation: CW and CCW
- Recommended control unit: 9910-VDR50 or 9910-GS50GI
- Weight: 54 lbs./24.5 kg (D1064); 76 lbs./34.5 kg (D1064GRGI)

Pressure in PSI and BAR	GPM	HP	GPM	HP	GPM	HP	GPM	HP	GPM	HP
	LPM	HP	LPM	HP	LPM	HP	LPM	HP	LPM	HP
	@350 RPM		@400 RPM		@450 RPM		@500 RPM		@550 RPM	
0 PSI	19.6	0.75	22.4	1.04	25.2	1.33	27.1	1.59	28.7	1.90
0 BAR	74.0	0.75	84.6	1.04	95.1	1.33	102.4	1.59	108.5	1.90
217 PSI	18.8	2.95	21.6	3.41	24.5	3.92	26.8	4.33	28.5	4.71
15 BAR	70.8	2.95	81.6	3.41	92.3	3.92	101.1	4.33	107.6	4.71
435 PSI	18.4	5.40	21.1	6.20	23.9	7.01	26.2	7.77	28.3	8.28
30 BAR	69.4	5.40	79.5	6.20	90.3	7.01	98.8	7.77	106.7	8.28
580 PSI	18.2	7.01	21.0	8.05	23.7	9.12	26.0	10.06	28.0	10.79
40 BAR	68.8	7.01	79.2	8.05	89.3	9.12	98.1	10.06	105.8	10.79
725 PSI	18.0	8.65	20.8	9.88	23.3	11.18	25.9	12.38	27.8	13.13
50 BAR	67.9	8.65	78.4	9.88	87.9	11.18	97.6	12.38	104.7	13.13

All HP requirements listed in the table are electrical. For approximate gasoline equivalent, multiply by 1.3.

Mfr Part #	Max GPM	Max LPM	Max PSI	Max BAR	Max RPM	Port Size	Shaft Output
9910-D1064	28.7	108.6	725	50	550	1-1⁄4" HB inlet, 3⁄4" NPT outlet	1-3⁄8"- 6 splined male shaft extension
9910-D1064GRGI	28.7	108.6	725	50	3600	Assembled with gearbox 9910-KIT1642 and control 9910-VDR50 for mounting on 18 hp gas engine	

How to order:
Specify Mfr Part #
Example: 9910-D1064

Westward Parts can source many other special order items that are not listed in this catalogue, please visit our website at westwardparts.com or call us directly at 1-888-937-7278. Our team will help you find what you need.
The product images shown are for illustration purposes only and may not be an exact representation of the product.

Diaphragm Kits and Applications

Hypro Pump Oil

Mfr Part #	Description	Weight	
		US Units	Metric
2160-0038	1 quart of specially-formulated pump oil	2 lbs.	907 g
2160-0047	1 gallon of specially-formulated pump oil	9 lbs.	4.1 kg
2160-0048	2 ½ gallons of specially-formulated pump oil	22 lbs.	9.98 kg

All Hypro Plunger Pumps are shipped with oil. To optimize pump life, Hypro recommends an oil change after 40 hours of break-in operation and every three months or 500 hour intervals thereafter.

PENTAIR
HYPRO® · SHURFLO®

1-3/8"-6 Spline Female PTO Shaft Kits

Kit Mfr Part #	Description	Weight	
		US Units	Metric
9910-KIT1704	For Model 9910-D50, D30, D303 and D403 pumps	7 lbs.	3.2 kg
9910-KIT1708	For Model 9910-D70 and D115 pumps	5.25 lbs.	2.4 kg
9910-KIT2204	For Model 9910-D503, D813, D1064 and D1265 pumps	7 lbs.	3.2 kg

Kit includes a female PTO coupler and retaining clamp, torque arm and mounting bracket, chains and necessary hardware.

1-3/8"-6 Spline Male PTO Shaft Kits

Kit Mfr Part #	Description	Weight	
		US Units	Metric
9910-KIT1702	For Model 9910-D30 pump	3 lbs.	1.4 kg
9910-KIT1706	For Model 9910-D50 pump	4.25 lbs.	1.9 kg
*9910-KIT1710	For Model 9910-D70 and D115 pumps	5.5 lbs.	2.5 kg
9910-KIT2200	For Model 9910-D503, D303 and D403 pumps	4.25 lbs.	1.9 kg
9910-KIT2201	For Model 9910-D813, D1064 and D1265 pumps	4.25 lbs.	1.9 kg

*Kit includes a male PTO shaft adapter, mounting bracket and necessary hardware.

1" Solid Shaft Kits

Kit Mfr Part #	Description	Weight	
		US Units	Metric
9910-KIT1703	For Model 9910-D30 pump	2.5 lbs.	1.7 kg
9910-KIT1707	For Model 9910-D50 pump	3.75 lbs.	1.7 kg
*9910-KIT1711	For Model 9910-D70 and D115 pumps	5 lbs.	2.3 kg
9910-KIT2202	For Model 9910-D503, D303 and D403 pumps	3.75 lbs.	1.7 kg
9910-KIT2203	For Model 9910-D813, D1064 and D1265 pumps	3.75 lbs.	1.7 kg

*Kit includes a male PTO shaft adapter, mounting bracket and necessary hardware.

Base Plates and Carrying Handles

Mfr Part #	Description	Ref.	Est. Weight Ea.	
			US Units	Metric
1510-0005	8" x 15" with 12 gauge	A	6 lbs.	2.7 kg
1510-0002	9 1/2" x 18" with 10 gauge	A	8 lbs.	3.6 kg
1510-0001	12" x 21" with 7 gauge	A	16 lbs.	7.3 kg
1510-0016	14" x 26" with 7 gauge	A	21 lbs.	9.5 kg
1510-0075	9-1/2" x 4-1/2" with 14 gauge (for 3 and 5 hp Briggs® or Honda® and 56 frame electric)	B	11 lbs.	5 kg
2801-0001	Two handles, mounting bolts and nuts for #1510-0016 base	C	3 lbs. 4 oz.	1.5 kg
2801-0002	Two handles, mounting bolts and nuts for #1510-0001 base	C	3 lbs. 3 oz.	1.4 kg

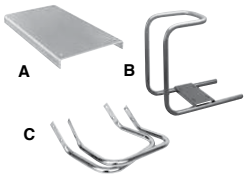

Diaphragm Pump Repair Kits

Pump Mfr Part #	Diaphragm Kit (Desmopan®)	Diaphragm Kit (Buna-N)	Valve Kit	O-ring Kit
9910-D70	9910-KIT1720	--------	9910-KIT2364	9910-KIT2365
9910-D115 and D135	9910-KIT1721	--------	9910-KIT2370	9910-KIT2026
9910-D160	9910-KIT1730	--------	9910-KIT2374	9910-KIT1908
9910-D250	9910-KIT1722	--------	9910-KIT2114	9910-KIT1904
9910-D12GRGI	9910-KIT1882	--------	9910-KIT1992	
9910-D503	9910-KIT1881	--------	9910-KIT1987	9910-KIT1984
9910-D252 (all versions)	9910-KIT1723	--------	9910-KIT2408	9910-KIT2409
9910-D30 (all versions)	9910-KIT1724	9910-KIT2110	9910-KIT1917	9910-KIT1916
9910-D50	9910-KIT1725	9910-KIT2111	9910-KIT1920	9910-KIT1919
9910-DBS110, DBS140, DBA110 and DBA140	--------	9910-KIT2444	9910-KIT2445	9910-KIT2446
9910-DBS160, DBS200, DBA160 and DBA200	--------	9910-KIT2456	9910-KIT2374	9910-KIT2457
9910-D303	9910-KIT2423	--------	9910-KIT2388	9910-KIT2389
9910-D403	9910-KIT2423	--------	9910-KIT2388	9910-KIT2389
9910-D813	9910-KIT2479	--------	9910-KIT1963	9910-KIT2376
9910-D1064	9910-KIT2480	--------	9910-KIT1964	9910-KIT2378
9910-D1265	9910-KIT2100	--------	9910-KIT2024	9910-KIT2347
9910-D1554	9910-KIT1734	--------	9910-KIT1965	9910-KIT1972
9910-D1516	9910-KIT2113	--------	9910-KIT2053	9910-KIT2349

How to order:
Specify Mfr Part #
Example: 990-D70

Pump and Gear Reduction Kits

Pumps

PENTAIR
HYPRO® · SHURFLO®

Model 9910-KIT1640

- For Pump Models 9910-D30, D303 and D403
- 6:1 gear box
- For standard 5.5 hp gas engine with 3⁄4" shaft
- Can be used with 9910-D50, D503 and D813, providing that pumps are operated at
- lower pressures that do not exceed 5 hp gas engine compatibility.
- Weight: 6.5 lbs./2.9 kg

Model 9910-KIT1642

- For Pump Models 9910-D50, D503, D813, D1064 and D1265
- 6:1 gear box
- For standard 8-18 hp gas engine with 1" shaft
- Weight: 8.5 lbs./3.9 kg

Model 8000-0056

- For Pump Models 9910-D30, D403, D50, and D503
- New and improved bolt-through pinion gear to help prevent keyway fretting and seizing
- Engine mounting flange designed for ease of assembly with standard tools
- Robust 6:1 gear design for increases longevity
- Increased oil capacity
- Made for use on gas engines with 3/4" shaft
- Available pre-assembled on HRGI models

How to order:
Specify Mfr Model #
Example: 8000-0056

Hydraulic Flange Kits

Pumps

PENTAIR
HYPRO® · SHURFLO®

Model 8000-0056

- Fits Diaphragm Pump Models 9910-D30, D50, D303, D403, D503, D813, D1064 and D1265
- Includes: one flange with SAE "A" 2 bolt, one 1" hollow shaft and two bolts

Model 9910-HYD1570

- Fits Diaphragm Pump Models 9910-D160 and D250
- Includes: one flange with SAE "A" 2 bolt, one 1" coupling and hardware for mounting

Model 9910-HYD2495

- Fits Diaphragm Pump Models 9910-D70, D115
- Includes: one flange with SAE "A" 2 bolt, one 1" coupling, two pins, spacer and hardware for mounting

Model 9910-KIT55357

- Fits Diaphragm Pump Models 9910-DP423, DP573 & DP763
- Includes: one flange with SAE "A" 2 bolt, one 1" coupling and hardware for mounting

How to order:
Specify Mfr Model #
Example: 800-0056

Diaphragm Pumps

Diaphragm Control Units

PENTAIR
HYPRO® · SHURFLO®

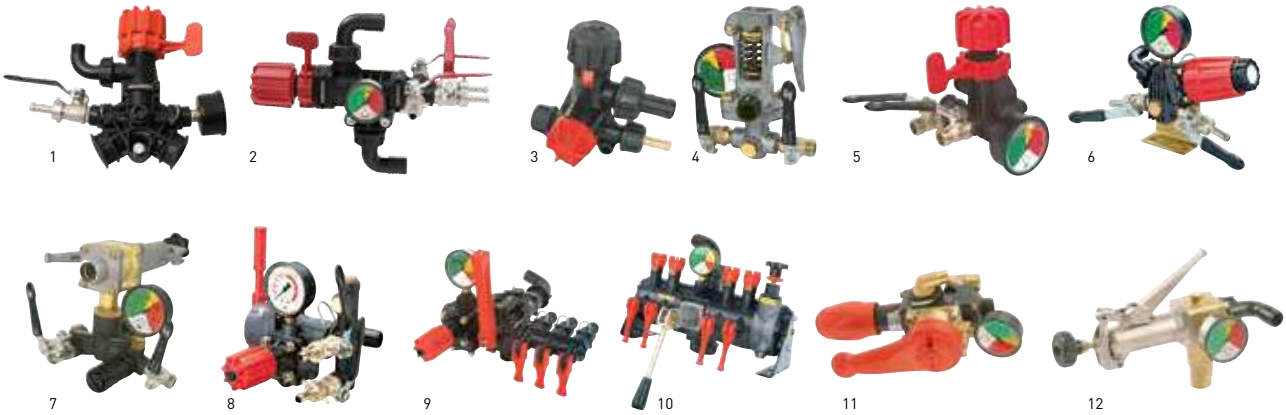

Ref #	Mfr Model #	For Pump Model	Includes	Max Flow	Max Pressure	Weight
1	9910-GS25	9910-DP423	Pressure gauge, adjustable high pressure relief valve, 1/2" HB outlet with ball valve shutoff, bypass lever, 3/4" HB bypass, 1" HB inlet	11 gpm (42 lpm)	290 psi (20 bar)	2 lbs. (0.9 kg)
2	9910-GS35S	9910-DP573 & 9910-DP763	Pressure gauge, adjustable high pressure relief valve, two 1/2" HB outlet with ball valve shutoff, bypass lever, 3/4" HB bypass, 1" HB inlet	24 gpm (90.8 lpm)	290 psi (20 bar)	3 lbs. (1.4 kg)
3	9910-KIT1990	9910-D252	One adjustable relief valve, one pressure/bypass selector, 5/8" HB bypass port and 3/8" HB outlet	6 gpm (22.7 lpm)	290 psi (20 bar)	1 lb. (0.5 kg)
4	9910-GS40GI	9910-D30 & 9910-D50	Pressure gauge, one adjustable high pressure relief valve, one complete bypass lever, two 1/2"" HB outlets with individual shut-offs, and 3/4"" hose barb bypass; Remote mounting kit: 9910-KIT1741	21 gpm (79.5 lpm)	580 psi (40 bar)	3.5 lbs. (1.6 kg)
5	9910-GR40	9910-D303 & 9910-D403	Pressure gauge, adjustable high pressure relief valve, complete bypass lever, 2-1/2"" pressure gauge, two 1/2"" hose barb outlets with individual shut-offs, and 5/8"" hose barb bypass; Remote mounting kit: 9910-KIT1741	11 gpm (42 lpm)	580 psi (40 bar)	2 lbs. (0.9 kg)
6	9910-RM40	9910-D503	Pressure gauge, one adjustable high pressure relief valve, one complete bypass knob, two 1/2" HB outlets with individual shut-offs, and 1" hose barb bypass; Remote mounting kit: 9910-KIT1897 (Includes: mounting bracket, bolts, and hose barb)	24 gpm (90.8 lpm)	580 psi (40.0 bar)	3.5 lbs. (1.6 kg)
7	9910-GS50GI	9910-D813, 9910-D1064, 9910-D1265 & 9910-D1516	Pressure gauge, one adjustable high pressure relief valve, one complete bypass lever, three 1/2" HB outlets with individual shut-offs, and 1" hose barb bypass; Remote mounting kit: 9910-KIT1742 (Includes: mounting bracket, bolts, and hose barb)	48 gpm (181.7 lpm)	725 psi (50 bar)	8.5 lbs. (3.6 kg)
8	9910-VDR50	9910-D813, 9910-D1064 & 9910-D1265	Pressure gauge, one adjustable high pressure relief valve, one complete bypass lever, two 1/2" HB outlets with individual shut-offs, and 1" hose barb bypass; For additional ball valve, order Part Number 9910-130491	35 gpm (132.5 lpm)	725 psi (50 bar)	3.5 lbs. (1.6 kg)
9	3300-0087	9910-D70, 9910-D115, 9910-D135 & 9910-D160	One built-in relief valve, one 1" HB inlet, three 3/4", 1/2" and 3/8" HB outlets with individual shut-offs; Model-0088 includes a main bypass lever	42.5 gpm (160.9 lpm)	290 psi (20 bar)	7 lbs. (3.2 kg)
	3300-0088					7.75 lbs. (3.5 kg)
10	3300-0082	9910-D250	Pressure gauge, one built-in adjustable relief valve, one main shut-off and complete bypass lever, four 3/4" HB outlets with individual shut-offs, and 1-1/2" hose barb bypass	66 gpm (249.8 lpm)	290 psi (20 bar)	18 lbs. (8.2 kg)
11	9910-BMH50	9910-DBS110 9910-DBA110, 9910-DBS140 9910-DBA140, 9910-DBS160 9910-DBA160, 9910-DBS200, & 9910-DBA200	Directional control unit with working pressure regulating valve, single lever for partial or total closure and discharge and glycerine-bath pressure gauge with colored dial	41 gpm (155.2 lpm)	725 psi (50 bar)	6.6 lbs. (3.0 kg)
12	9910-GH50		Working pressure regulating valve, bypass control lever and glycerine-bath pressure gauge with colored dial	52.8 gpm (200 lpm)	725 psi (50 bar)	8.25 lbs. (3.7 kg)

How to order:
Specify Mfr Model #
Example: 9910-GH50

Shurflo Pumps

Demand vs Bypass Pump

PENTAIR
HYPRO® · SHURFLO®

Demand Pump

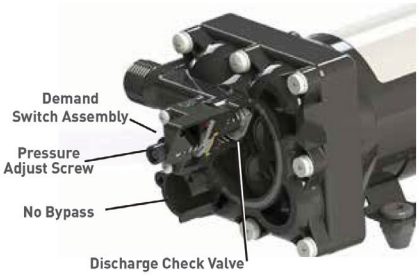

Common Uses:
Applications with a set flow and pressure requirement. Example: Spray wands on spot sprayers.

How it Works:
When the operator shuts off the wand, pressure in the line increases to a set point and the pressure switch shuts off the motor. A check valve inside the pump keeps trapped pressure in the line. When the wand is turned back on, pressure in the line decreases. The pressure falls below the set point that then restarts the pump

Sizing the Pump:
Select a pump with a pressure and flow point that is matched to the orifice size in the wand

Pro:

- Saves wear and tear on the pump
- Extends the service life of the battery

Con:

- Can be difficult to use with variable rate hand operated spray wands & guns

Bypass Pump

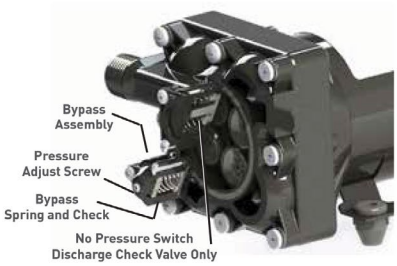

Common Uses:
Applications where a wide range of flows and pressures may be required. Example: Spray bar with multiple nozzles, all controlled independently.

How it Works:
The pump continues to run regardless of pressure in the system. For the spray bar example, the flow rate is different when one nozzle is turned on as opposed to having two or more turned on. As nozzles are turned off, excess flow is bypassed within the pump.

Sizing the Pump:
Size the pump for the maximum flow rate required with all nozzles spraying

Pro:

- Prevents on/off cycling of pump which can lead to early failure

Con:

- If the discharge valve is closed for too long, overheating and damage can occur
- Constant amp draw can reduce battery power life

Shurflo 5000 Series Diaphragm Pumps

5 GPM Bypass and Automatic-Demand Pumps 12 VDC

PENTAIR
HYPRO® · SHURFLO®

The field-proven Shurflo 5.3 gpm [20.1 L/min] pump delivers 3.8 gpm at 40 psi [14.4 L/min at 2.75 bar] with current draw of 14 amps. This pump is designed with a Santoprene® diaphragm for chemical resistance and maximum life, as well as Viton® valves for maximum chemical resistance. Also included is a built-in pressure switch, set at 60 PSI [4.14 bar], which protects the pump in the event of dead-heading. The pump is available in the same footprint as other Shurflo pumps, allowing users to upgrade to a higher performance on existing installations.

Features:

- Field-proven pump head design
- Driven by a 12-volt, sealed motor
- Self-priming up to 8 feet [2.4 m]
- Santoprene® diaphragm for chemical resistance and maximum life
- Viton® valves provide maximum chemical resistance
- Automatic demand versions with built-in pressure switch, set at 60 psi [4.14 bar], protects the pump in the event of dead-heading
- Bypass versions set at 90 psi (5.86 bar), protects the pump in the event of dead heading
- Available in the same footprint as other Shurflo pumps, allowing users to upgrade to a higher performance on existing installations

Bypass

Demand

Bypass 12VDC

Mfr Part #	Max GPM	Max LPM	Max PSI	Max BAR	Port Size	Max Draw
5059-3611-D011	5.3	20.1	90	6.2	1/2" npsm*	20.9
5059-3610-D011	5.3	20.1	90	6.2	1/2" NPTF	20.9

* 1/2" -14 American National Standard Straight Pipe Thread
** For retail box: change "-D011" to "-D012"

Bypass 12VDC

Mfr Part #	PSI	GPM	BAR	L /min	Amps
5059-3611-D011 5059-3610-D011	0	5.3	0	20.1	6.5
	10	4.7	.7	17.8	9.0
	20	4.3	1.4	16.3	10.2
	30	4.1	2.1	15.5	12.0
	40	3.4	2.8	12.9	13.5
	50	2.6	3.4	9.8	15.2
	60	1.8	4.1	6.8	16.9
	70	1.1	4.8	4.2	18.5
	80	0.4	5.5	1.5	20.1
	90	0.0	6.2	0.0	20.9

Demand 12VDC

Mfr Part #	Max GPM	Max LPM	Max PSI	Max BAR	Port Size	Max Draw
5059-1311-D011	5.3	20.1	60	3.4	1/2" npsm*	17.0
5059-1310-D011	5.3	20.1	60	3.4	1/2" NPTF	17.0

* 1/2" -14 American National Standard Straight Pipe Thread
** For retail box: change "-D011" to "-D012"

Demand 12VDC

Mfr Part #	PSI	GPM	BAR	L /min	Amps
5059-1311-D011 5059-1310-D011	0	5.3	0	20.1	6.5
	10	4.7	.69	17.8	9.0
	20	4.3	1.38	16.3	11.8
	30	4.1	2.07	15.5	12.4
	40	3.8	2.75	14.4	14.0
	50	3.6	3.45	13.6	15.4
	60	3.4	4.14	12.9	17.0

How to order:
Specify Mfr Part #
Example: 5059-3611-D011

Westward Parts can source many other special order items that are not listed in this catalogue, please visit our website at westwardparts.com or call us directly at 1-888-937-7278. Our team will help you find what you need.
The product images shown are for illustration purposes only and may not be an exact representation of the product.

Shurflo 8000 Series Diaphragm Pumps

Automatic-Demand Pumps 12 VDC

The 8000 Series diaphragm pump the most widely used Shurflo® agriculture pump. Viton® valve material assures maximum chemical resistance. The unique conical valve design delivers high flow rates at maximum discharge pressures, making the 8000 Series the pump of choice for sprayers used on the farm or around the yard. These 12 VDC pumps deliver up to 1.8 GPM [6.8 L/min] providing maximum performance in a wide range of applications.

Features:

- Self-priming up to 8 vertical feet [2.4m]
- Chemical-resistant materials
- Designed for heavy-duty spraying and fluid transfer applications
- Can run dry without damage
- Built-in check valve

PENTAIR
HYPRO® · SHURFLO®

8000-543-236

8000-543-936

Mnf Part #	Max GPM	Max LPM	Max PSI	Max BAR	Port Size	Max Draw	Description
8000-343-236	1.2	4.5	60	4.1	3/8" NPT-Female	5.8	All Viton® Pump: Viton® valves, Viton® diaphragm, 60 PSI (4.1 bar) demand switch
8000-541-236*	1.0	3.8	60	4.1	3/8" NPT-Female	3.8	Lawn and Garden Pump: Viton® valves, Santoprene® diaphragm, 60 PSI (4.1 bar) demand switch
8000-542-136	1.2	4.5	60	4.1	1/2" MSPT-Male	6.0	Low Flow Standard Pump: Viton® valves, Santoprene® diaphragm, 60 PSI (4.1 bar) demand switch
8000-543-136	1.8	6.8	60	4.1	1/2" MSPT-Male	7.3	Standard Pump: Viton® valves, Santoprene® diaphragm, 60 PSI (4.1 bar) demand switch
8000-543-236*	1.8	6.8	50	3.4	3/8" NPT-Female	6.4	Standard Pump: Viton® valves, Santoprene® diaphragm, 60 PSI (4.1 bar) demand switch
8000-543-238	1.8	6.8	100	6.9	3/8" NPT-Female	8.7	High Pressure Pump: Viton® valves, Santoprene® diaphragm, 100 PSI (6.9 bar) demand switch
8000-543-138	1.8	6.8	100	6.9	1/2" MSPT-Male	8.7	High Pressure Pump: Viton® valves, Santoprene® diaphragm, 100 PSI (6.9 bar) demand switch
8000-543-936*	1.8	6.8	50	3.4	3/8" NPT-Female	6.4	Standard Pump w/Wire Harness: Viton® valves, Santoprene® diaphragm, prewired with two wire molded connectors, 60 PSI (4.1 bar) demand switch
8000-547-189	1.8	6.8	107	7.4	1/2" MSPT Male	7.0	High Pressure Pump: Viton®valves, Santoprene® diaphragm, 100 PSI (6.9 bar) demand switch with internal bypass
8000-643-236	1.8	6.8	60	4.1	3/8" NPT-Female	6.8	Transfer Pump: Buna valves, Geolast® diaphragm, 60 PSI (4.1 bar) demand switch
8030-813-239	1.6	6.1	150	9.5	3/8" NPT-Female	12.0	High Pressure Pump: Viton® valves, Santoprene® diaphragm, 150 PSI (10.3 bar) demand switch

* Packaged in quantities of 6. For single packs, replace "8000-" with "8009."
Viton® is a registered trademark of DuPont. Hypro® is a registered trademark of Pentair Ltd.

Mnf Part #	PSI	BAR	GPM	L/min	Amps
8000-343-236	20	1.4	0.93	3.5	3.9
	40	2.8	0.84	3.2	4.9
	50	3.4	0.80	3.0	5.3
	60	4.1	0.76	2.9	5.8
8000-541-236	20	1.4	0.79	3.0	2.3
	30	2.1	0.75	2.8	2.8
	40	2.8	0.70	2.6	3.2
	60	4.1	0.62	2.3	3.8
8000-542-136	20	1.4	1.11	4.2	4.1
	40	2.8	0.98	3.7	5.1
	50	3.4	0.93	3.5	5.6
	60	4.1	0.90	3.4	6.0
8000-543-136	20	1.4	1.26	4.7	5.0
	40	2.8	1.14	4.3	6.2
	50	3.4	1.08	4.1	6.8
	60	4.1	1.02	3.9	7.3
8000-543-236	30	1.4	1.47	5.5	5.7
	40	2.8	1.41	5.3	5.8
	50	3.4	1.36	5.1	6.4
8000-543-238	20	1.4	1.45	5.5	4.2
	40	2.8	1.31	5.0	5.5
	60	4.1	1.22	4.6	6.5
	100	6.9	0.96	3.6	8.7
8000-543-138	20	1.4	1.45	5.5	4.2
	40	2.8	1.31	5.0	5.5
	60	4.1	1.22	4.6	6.5
	100	6.9	0.96	3.6	8.7
8000-543-936	30	1.4	1.47	5.5	5.7
	40	2.8	1.41	5.3	5.8
	50	3.4	1.36	5.1	6.4
8000-643-236	20	1.4	1.44	5.4	4.1
	40	2.8	1.33	5.0	5.4
	50	3.4	1.27	4.8	6.1
	60	4.1	1.22	4.6	6.8
8030-813-239	20	1.4	1.55	5.9	5.5
	30	2.1	1.49	5.6	6.2
	40	2.8	1.43	5.4	6.8
	80	5.4	1.20	4.5	9.1
	100	6.9	1.10	4.2	10.1
	150	9.5	0.83	3.1	12.0

How to order:
Specify Mfr Part #
Example: 8000-343-236

Westward Parts can source many other special order items that are not listed in this catalogue, please visit our website at westwardparts.com or call us directly at 1-888-937-7278. Our team will help you find what you need.
The product images shown are for illustration purposes only and may not be an exact representation of the product.

Shurflo 8000 Series Diaphragm Pumps

Bypass Pumps 12 VDC

Designed to accommodate applications that have external pressure valves plumbed into the system

Features:

- Self-priming up to 8 vertical feet [2.4m]
- Chemical-resistant materials
- 1⁄4" adapter for external bypass hook-up
- Can run dry without damage

8000-543-290

PENTAIR
HYPRO® · SHURFLO®

Mfr Part #	Max GPM	Max LPM	Max PSI	Max BAR	Port Size	Max Draw	Description
8000-543-290	1.8	6.8	100	6.9	3⁄8" NPT-Female	8.8	Front Adapter Pump: Viton® valves, Santoprene® diaphragm, 1⁄4" FNPT adapter mounted on switch ports

Mfr Part #	PSI	BAR	GPM	L/min	Amps
8000-543-290	20	1.4	1.26	4.7	5.0
	40	2.8	1.14	4.3	6.2
	60	4.1	1.02	3.9	7.3
	80	5.5	0.93	3.5	8.0
	100	6.9	0.84	3.2	8.8

Bypass Pumps 12 VDC

8000 Series internal bypass pumps are ideal for applications where an automatic demand switch is not desired. Pumps with bypass will continue to run without damage once the bypass pressure is reached. They incorporate a triple chamber design with Viton elastomers to withstand the toughest applications. Perfect for spot sprayers, foam markers and transfer applications where smooth, consistent flow is needed.

Features:

- Self-priming up to 8 vertical feet [2.4m]
- Chemical-resistant materials
- Internal bypass
- Can run dry without damage

8000-543-250

Mfr Part #	Max GPM	Max LPM	Max PSI	Max BAR	Port Size	Max Draw	Description
8000-543-250*	1.8	6.8	50	3.4	3⁄8" NPT-Female	5.5	Standard Bypass Pump: Viton® valves, Santoprene® diaphragm, 45 PSI (3.1 BAR) internal bypass
8000-543-210	1.3	4.9	40	2.8	3⁄8" NPT-Female	5.5	Standard Bypass Pump: Viton® valves, Santoprene® diaphragm, 35 PSI (2.4 BAR) internal bypass
8000-543-220	1.5	5.7	60	4.1	3⁄8" NPT-Female	7.1	Standard Bypass Pump: Viton® valves, Santoprene® diaphragm, 60 PSI (4.1 BAR) internal bypass
8006-543-250	1.4	5.3	50	3.4	3⁄8" NPT-Female	5.5	Bypass Pump with Reversed Pumphead: Viton® valves, Santoprene® diaphragm, 45 PSI (3.1 BAR) internal bypass

* Packaged in quantities of 6. For single packs, replace "8000-" with "8009."

Mfr Part #	PSI	BAR	GPM	L/min	Amps
8000-543-250	20	1.4	1.30	4.9	4.0
	30	2.1	1.11	4.2	4.7
	40	2.8	0.69	2.6	5.2
	50	4.1	0.18	0.7	5.5
8000-543-210	10	0.7	1.28	4.8	3.8
	20	1.4	1.19	4.5	4.4
	30	2.1	1.07	4.0	5.0
	40	2.8	0.05	0.19	5.5
8000-543-220	10	0.7	1.52	5.7	3.8
	20	1.4	1.45	5.5	4.5
	30	2.1	1.39	5.3	5.2
	60	4.1	1.12	4.2	7.1
8006-543-250	10	0.7	1.40	5.3	3.4
	20	1.4	1.30	4.9	4.0
	40	2.8	0.69	2.6	5.2
	50	4.1	0.18	0.7	5.5

How to order:
Specify Mfr Part #
Example: 8000-543-250

Westward Parts can source many other special order items that are not listed in this catalogue, please visit our website at westwardparts.com or call us directly at 1-888-937-7278. Our team will help you find what you need.
The product images shown are for illustration purposes only and may not be an exact representation of the product.

Shurflo ® 8000, 8090 and 8020 Series Diaphragm Pumps

Bypass and Automatic-Demand Pumps 115 VAC and 230 VAC

PENTAIR
HYPRO® · SHURFLO®

These Shurflo 8000, 8090 and 8020 Series bypass and demand pumps provide the same reliability as the 12 VDC version, except in a 115 VACor 230 VAC capacity. They are ideal in agricultural applications that require high pressure with flow rates up to 1.6 GPM [6.1 L/min] and low amp draw. They can be mounted in any position, are compact, and are designed for easy maintenance.

Features:

- Self-priming up to 8 vertical feet [2.4m]
- Built-in check valve
- Chemical-resistant materials
- Corded pump optional
- Can run dry without damage
- 2 pin connector on power leads
- Available with or without integral fuse
- Rocker switch protected from the elements by a clear boot

8020-833-238
8000-533-250

Bypass 115 VAC

Mfr Part #	Max GPM	Max LPM	Max PSI	Max BAR	Port Size	Max Draw	Description
8000-533-250	1.4	5.3	50	3.4	3/8" NPT-Female	0.54	Bypass Pump: Viton® valves, Santoprene® diaphragm, 45 PSI (3.1 bar) Internal Bypass
8020-503-250	1.5	5.7	40	2.8	3/8" NPT-Female	0.56	Bypass Pump with 6' Power Cord: Viton® valves, Santoprene® diaphragm, 45 PSI (3.1 bar) Internal Bypass

Bypass 115 VAC

Mfr Part #	PSI	BAR	GPM	L/min	Amps
8000-533-250	10	0.7	1.36	5.1	0.34
	30	2.1	1.05	4.0	0.46
	40	2.8	0.65	2.5	0.51
	50	3.4	0.19	0.7	0.54
8020-503-250	10	0.7	1.40	5.3	0.37
	20	1.4	1.30	4.9	0.44
	30	2.1	1.10	4.2	0.50
	40	2.8	0.80	3.0	0.56

Demand 115 VAC

Mfr Part #	Max GPM	Max LPM	Max PSI	Max BAR	Port Size	Max Draw	Description
8000-533-236	1.4	5.3	60	4.1	3/8" NPT-Female	0.64	Standard Demand Pump: Viton® valves, Santoprene® diaphragm, 60 PSI (4.1 bar) demand switch
8020-513-236	1.5	5.7	60	4.1	3/8" NPT-Female	0.57	Standard Demand Pump: Viton® valves, Santoprene® diaphragm, 60 PSI (4.1 bar) demand switch with 6 ft (1.8 m) power cord
8020-833-238	1.6	6.1	100	6.9	3/8" NPT-Female	0.95	High Pressure Pump with 6 ft. Power Cord: Viton® valves, Santoprene® diaphragm, 100 PSI (6.9 bar) demand switch
8030-863-239	1.5	5.7	150	9.7	3/8" NPT-Female	1	High Pressure Pump: Viton® valves, Santoprene® diaphragm,150 PSI (10.3bar) demand switch

Demand 115 VAC

Mfr Part #	PSI	BAR	GPM	L/min	Amps
8000-533-236	20	1.4	1.15	4.3	0.46
	40	2.8	0.97	3.7	0.55
	50	3.4	0.91	3.4	0.60
	60	4.1	0.85	3.2	0.64
8020-513-236	20	1.4	1.15	4.8	0.40
	40	2.8	0.96	4.1	0.49
	50	3.4	0.90	3.6	0.54
	60	4.1	0.84	3.5	0.57
8020-833-238	20	1.4	1.32	5.0	0.45
	40	2.8	1.14	4.3	0.58
	60	4.1	1.07	4.0	0.70
	100	6.9	0.91	3.4	0.95
8030-863-239	20	1.4	1.24	4.7	0.45
	60	4.1	1.04	3.9	0.66
	120	8.3	0.77	2.9	0.92
	150	9.7	0.63	2.4	1.00

Bypass 230 VAC

Mfr Part #	Max GPM	Max LPM	Max PSI	Max Bar	Port Size	Max Draw	Description
8090-802-289	1.2	4.5	80	5.5	3/8" NPT Female	0.56	Bypass Pump: Viton® valves, Santoprene® diaphragm, 80 PSI (5.5 bar) Internal Bypass
8095-902-260	1.5	5.7	100	6.9	3/8" NPT Female	0.56	Bypass Pump: EPDM valves, Santoprene® diaphragm, 100 PSI (6.9 bar) Internal Bypass

Demand & Demand/Bypass 230 VAC

Mfr Part #	Max GPM	Max LPM	Max PSI	Max BAR	Port Size	Max Draw	Description
8090-212-246	1.2	4.5	60	4.1	3/8" NPT Female	0.34	Standard Demand Pump: EPDM valves, Santoprene® diaphragm, 60 PSI (4.1 bar) demand switch
8090-801-278	1.3	4.9	100	6.9	3/8" NPT Female	0.56	Demand/Bypass Pump: Viton® valves, Santoprene® diaphragm, 80 PSI (5.5 bar) Internal Bypass, 100 PSI (6.9 bar) demand switch
8090-902-278	1.4	5.3	100	5.5	3/8" NPT Female	0.56	Demand/Bypass Pump: EPDM valves, Santoprene® diaphragm, 80 PSI (5.5 bar) Internal Bypass, 100 PSI (6.9 bar) demand switch

Viton® is a registered trademark of DuPont. Hypro® is a registered trademark of Pentair Ltd.

How to order:
Specify Mfr Part #
Example: 8000-533-250

Shurflo 8007 Series Diaphragm Pumps

Bypass and Automatic-Demand 12 VDC with Electrical Package

PENTAIR
HYPRO® · SHURFLO®

These models include an aesthetically-pleasing molded assembly, housing a rocker-type manual switch with international on/off switch symbols. Wiring is neatly routed into the molded assembly through form fitting entries and strain relieved inside the housing. Fused versions come with an automotive-type fuse housed under a snug fitting cap marked "fuse." Non-fused versions have a raised section.

Features:

- Self-priming up to 8 vertical feet [2.4m]
- Chemical-resistant materials
- Internal bypass option
- Can run dry without damage
- Built-in on/off switch included
- 2 pin connector on power leads
- Available with or without integral fuse
- Rocker switch protected from the elements by a clear boot

8007-543-850
(Front and Back Shown)

Bypass 12VDC

Mfr Part #	Max GPM	Max LPM	Max PSI	Max BAR	Port Size	Max Draw	Description
8007-543-850	1.8	6.8	50	3.4	3/8" NPT-Female	5.5	Bypass Pump w/Electrical Package: Viton® valves, Santoprene® diaphragm, 45 PSI (3.1 bar) bypass, Manual on/off switch 2 pin connector and fuse

Bypass 12VDC

Mfr Part #	PSI	BAR	GPM	L/min	Amps
8007-543-850	10	0.7	1.40	5.3	3.4
	20	1.4	1.30	4.9	4.0
	30	2.1	1.11	4.2	4.7
	40	2.8	0.69	2.6	5.2
	50	3.4	0.18	0.7	5.5

Demand 12VDC

Mfr Part #	Max GPM	Max LPM	Max PSI	Max BAR	Port Size	Max Draw	Description
8007-591-236	1.0	3.8	50	3.4	3/8" NPT-Female	3.7	Demand Pump w/Electrical Package: Viton® valves, Santoprene® diaphragm, 60 PSI (4.1 bar) Demand Switch Manual on/off switch 2 pin connector (8007-543-836 includes fuse)
8007-593-836	1.8	6.8	50	3.4	3/8" NPT-Female	6.4	
8007-543-836	1.8	6.8	50	3.4	3/8" NPT-Female	6.4	

Demand 12VDC

Mfr Part #	PSI	BAR	GPM	L/min	Amps
8007-591-236	30	2.1	0.74	2.8	2.9
	40	2.8	0.69	2.6	3.2
	50	3.4	0.65	2.5	3.7
8007-593-836	30	2.1	1.47	5.5	5.3
	40	2.8	1.41	5.3	5.8
	50	3.4	1.36	5.1	6.4
8007-543-836	30	2.1	1.47	5.5	5.3
	40	2.8	1.41	5.3	5.8
	50	3.4	1.36	5.1	6.4

How to order:
Specify Mfr Part #
Example: 8007-543-850

Westward Parts can source many other special order items that are not listed in this catalogue, please visit our website at westwardparts.com or call us directly at 1-888-937-7278. Our team will help you find what you need.
The product images shown are for illustration purposes only and may not be an exact representation of the product.

Shurflo 2088 Series Diaphragm Pumps

Automatic-Demand Pumps 12 VDC

Shurflo® 2088 Series diaphragm pumps deliver reliable performance in high flow, moderate pressure applications. They are used in a variety of spot spraying, multi-tip spraying and fertilizer drip applications that require flows of up to 3.6 GPM [13.6 L/min]. They are available in a variety of chemical-resistant materials.

Features:

- Self-priming up to 12 vertical feet [3.7m]
- Chemical-resistant materials
- Can run dry without damage
- Automatic demand
- Built-in check valve (varies by model) prevents back flow of fluid into the solution tank
- Continuous duty motor on fin-cooled version

PENTAIR
HYPRO® · SHURFLO®

2088-343-135

Mfr Part #	Max GPM	Max LPM	Max PSI	Max PSI	Port Size	Max Draw	Description
2088-313-145	3.6	13.6	40	2.8	1/2" MSPT* Male	9.5	Standard Pump: with fin cooled motor Viton® valves, Santoprene® diaphragm, 45 PSI (3.1 bar) demand switch
2088-443-144	3.5	13.2	45	3.1	1/2" MSPT* Male	9.1	Standard Pump: Santoprene® valves, Santoprene® diaphragm, 45 PSI (3.1 bar) demand switch
2088-343-135†	3	11.4	40	2.8	1/2" MSPT* Male	7.7	Standard Pump: Viton® valves, Santoprene® diaphragm, 45 PSI (3.1 bar) demand switch

* ½" - 14 National American Straight Pipe Thread
† Packaged in quantities of 6. For single pack, replace "135" with "435."
Viton® is a registered trademark of DuPont. Hypro® is a registered trademark of Pentair Ltd.

Mfr Part #	PSI	BAR	GPM	L/min	Amps
2088-313-145	10	0.7	3.09	11.7	6.4
	20	1.4	2.82	10.7	7.6
	30	2.1	2.49	9.4	8.7
	40	2.8	2.15	8.1	9.5
2088-443-144	10	0.7	2.83	10.7	5.8
	20	1.4	2.56	9.7	7.0
	30	2.1	2.31	8.7	8.0
	40	2.8	2.02	7.6	9.1
2088-343-135	10	0.7	2.80	10.6	5.3
	20	1.4	2.69	10.2	5.5
	30	2.1	2.36	8.9	6.7
	40	2.8	2.05	7.8	7.7

How to order:
Specify Mfr Part #
Example: 2088-313-145

No Control Pumps 12 VDC

Shurflo® 2088 Series diaphragm pumps deliver reliable performance in high flow, moderate pressure applications. They are used in a variety of spraying and transferring applications that require flows of up to 3.3 GPM [12.5 L/min]. They are available in a variety of chemical-resistant materials. They can be mounted in any position and are designed for easy maintenance.

Features:

- Self-priming up to 12 vertical feet [3.7m]
- Chemical-resistant materials
- Can run dry without damage
- Built-in check valve (may vary by models) prevents back flow of fluid through the pump

2088-343-500

Mfr Part #	Max GPM	Max LPM	Max PSI	Max BAR	Port Size	Max Draw	Description
2088-343-170	3.3	12.5	50	3.4	1/2" MSPT* Male	9.1	Front Adapter Pump with Electrical Package: Viton® valves, Santoprene® diaphragm, 1/4" FPT adapter mounted on switch port, built-in on/off power switch, fuse holder pre-wired w/2-wire molded connector, no demand switch
2088-343-500	3.3	12.5	50	3.4	1/2" MSPT* Male	10.1	Front Adapter Pump: Viton® valves, Santoprene® diaphragm, 1/4" FPT adapter mounted on switch port, no demand switch

* 1/2" - 14 National American Straight Pipe Thread

Mfr Part #	PSI	BAR	GPM	L/min	Amps
2088-343-170	10	0.7	3.00	11.3	5.0
	30	2.1	2.38	9.0	7.5
	40	2.8	2.14	8.1	8.3
	50	3.4	1.86	7.0	9.1
2088-343-500	10	0.7	2.79	10.6	5.8
	30	2.1	2.26	8.6	8.3
	40	2.8	1.99	7.5	9.3
	50	3.4	1.69	6.4	10.1

How to order:
Specify Mfr Part #
Example: 2088-343-170

Automatic-Demand Pumps 115 & 230 VAC

These Shurflo® 2088 Series pumps offer the same reliability as the 12 VDC version except in 115 VAC capacity. They are used in a variety of spot spraying, mini-bulk transfer and fertilizer applications that require flows of up to 3.2 GPM [12.1 L/min]. They are available in a variety of chemical-resistant materials.

Features:

- Self-priming up to 12 vertical feet [3.7m]
- Chemical-resistant materials
- Can run dry without damage
- Automatic demand
- Built-in check valve (may vary by model) prevents back flow of fluid into the solution tank

2088-394-144

Mfr Part #	Max GPM	Max LPM	Max PSI	Max BAR	Port Size	Max Draw	Description
2088-394-144	3	11.4	40	2.8	1/2" MSPT* Male	0.7	115 VACPump with 6' power cord: Viton® valves, Santoprene® diaphragm, 45 PSI (3.1 bar) demand switch
2088-394-154	3.2	12.1	40	2.8	1/2" MSPT* Male	0.98	115 VAC Pump: Viton® valves, Santoprene® diaphragm, 45 PSI (3.1 bar) demand switch
2088-564-144	3.0	11.3	50	3.4	1/2" MSPT* Male	0.6	230 VAC Pump: Santoprene® valves, Santoprene® diaphragm, 45 PSI (3.1 bar) demand switch

* 1/2" - 14 National American Straight Pipe Thread

Mfr Part #	PSI	BAR	GPM	L/min	Amps
2088-394-144	10	0.7	2.40	9.1	.55
	20	1.4	2.20	8.3	.60
	30	2.1	1.90	7.2	.65
	40	2.8	1.60	6.0	.70
2088-394-154	10	0.7	2.71	10.2	.65
	20	1.4	2.41	9.1	.77
	30	2.1	2.10	8.0	.89
	40	2.8	1.84	7.0	.98
2088-564-144	10	0.7	2.80	10.6	0.35
	20	1.4	2.50	9.5	0.45
	30	2.1	2.20	8.3	0.50
	40	2.8	2.00	7.6	0.55
	50	3.4	1.70	6.4	0.60

How to order:
Specify Mfr Part #
Example: 2088-313-145

Shurflo Power Twin Pump

Pumps

Demand Pumps 12VDC

PENTAIR
HYPRO® · SHURFLO®

Take all the performance and features of the time-tested 2088 series, double it, and the result is the high-flow Power Twin. Delivers an open flow of 6.25 GPM [23.7 L/min] at a mere 8.7 amps. At 40 PSI [2.8 bar], it delivers 3.5 GPM [13.2 L/min] and draws only 17.2 amps. One of the most efficient high-flow self-priming pumps available today, the Power Twin is excellent for transferring, light-duty spraying, and use as a 1:1 proportioning pump.

Features:

- Up to 6.25 GPM [23.7 L/min]
- Thermally-protected motor with heat sink
- Self-priming up to 7 vertical feet (2.13 m)
- Quiet, balanced operation
- Long-life pressure switch
- Intake/Discharge manifold optional
- Available with or without integral fuse
- Rocker switch protected from the elements by a clear boot

4211-035

Mfr Part #	Max GPM	Max LPM	Max PSI	Max BAR	Port Size	Max Draw	Description
4111-035	6.25	23.7	40	2.8	1/2" MPT	17.2	Viton® valves, Santoprene® diaphragm, 45 PSI (3.1 bar) demand switch, manifold with 5/8" barb ports
4211-035	6.25	23.7	40	2.8	1/2" MPT	17.2	Viton® valves, Santoprene® diaphragm, 45 PSI (3.1 bar) demand switch
94-389-00	Manifold Kit 5/8" barb (2) per pump						
94-389-01	Manifold Kit 3/4" barb (2) per pump						

Viton® is a registered trademark of DuPont. Hypro® is a registered trademark of Pentair Ltd.

Mfr Part #	PSI	BAR	GPM	L/min	Amps
4111-035	0	0	6.25	23.5	8.7
	10	0.7	5.7	21.6	12.2
	20	1.4	5.0	19.0	14.5
	30	2.1	4.3	16.2	16.1
	40	2.8	3.5	13.2	17.2
4211-035	0	0	6.25	23.5	8.7
	10	0.7	5.7	21.6	12.2
	20	1.4	5.0	19.0	14.5
	30	2.1	4.3	16.2	16.1
	40	2.8	3.5	13.2	17.2

How to order:
Specify Mfr Part #
Example: 4111-035

Shurflo Ag Runner Transfer Pumps

Pumps

PENTAIR
HYPRO® · SHURFLO®

The Shurflo® AG Runner Transfer Pump System is designed to safely and accurately transfer bulk chemicals to the point of use.

Features:

- Industry leading pump
- Portable
- Can be used with a variety of bulk containers
- Built for rugged service with a heavy-duty welded frame
- Simple and accurate flow indicator

Mnf Part #	Flow Meter Type	Description
SF-1100-PTS	Pump-mounted (FM-1100)	Chemical Transfer Pump with 12 VDC motor, 20 ft. (6 m) cable, alligator clips and in-line fuse (Part # SF-1100 - EPDM valves or SF-1105 - Viton® valves), electronic flow meter, 1-in. NPT x 12 ft. (3.7 m) EPDM discharge hose with ball valve/spout, and 1-in. NPT x 12 ft. (3.7 m) EPDM inlet hose with 1-in. elbow/ball valve/fitting assembly with locking cam arms
SF-1100-PTSi	Inline (FM-1100i)	
SF-1100-PTSi-00	No Flow Meter	
SF-1105-PTS	Pump-mounted (FM-1100)	
SF-1105-PTSi	Inline (FM-1100i)	

How to order:
Specify Mfr Part #
Example: SF-1100-PTS

Westward Parts can source many other special order items that are not listed in this catalogue, please visit our website at westwardparts.com or call us directly at 1-888-937-7278. Our team will help you find what you need.
The product images shown are for illustration purposes only and may not be an exact representation of the product.

Shurflo Mini-Bulk Chemical Transfer System

Pumps

Shurflo® Mini-Bulk Chemical Transfer Pumps and Systems are designed specifically for chemical company tanks where the pump is integral to the tank. The SF-1100-REC system is mounted to any tank with a 9-inch, threaded opening. This system allows the pump to recirculate the suspended chemical components prior to transferring to the point of use.

PENTAIR
HYPRO® · SHURFLO®

Mnf Part #	Description
SF-1100-REC-DT	Chemical Transfer Pump with 12 VDC motor, 20 ft. (6 m) cable, alligator clips & in-line fuse (Part # SF-1100 - EPDM valves or SF-1105 - Viton® valves), in-line electronic flow meter (Part # FM-1100i), 1-in. NPT x 12 ft. (3.7 m) EPDM discharge hose with ball valve/spout, 3-way valve, tubing and fittings to allow tank recirculation, and 28" (71 cm) dip tube. (SF-1100-REC-DT only)
SF-1105-REC*	

* Does not come with 28" dip tube. To order dip tube separately use part number 2407-0002
Viton® is a registered trademark of DuPont. Hypro® is a registered trademark of Pentair Ltd.

How to order:
Specify Mfr Part #
Example: SF-1100-REC-DT

Shurflo Mini-Bulk Pumps

Pumps

Mini-Bulk Pumps

PENTAIR
HYPRO® · SHURFLO®

The SF-1100 Series Bulk Chemical Pumps are the industry leader. They are designed for efficiency and power to handle highly viscous fluids. Servicing the SF-1100 series pump is a rare event, but if needed, it can be serviced quickly and easily with only a few hand tools.

Features:

- Specialized EPDM elastics or Viton option
- 12 volt DC or 110 volt AC motor option
- 20 foot cord with alligator clips and in-line fuse (DC only)
- Weather protected on/off switch
- Internal bypass to protect the pump at shut-off
- 2" MNPT inlet, 1" FNPT outlet
- Capable of priming up to 12 feet

Mfr Part #	Valves	Motor
SF-1100	EPDM	12 VDC
SF-1100-110V	EPDM	110 VAC
SF-1105	Viton®	12 VDC

Mfr Part #	PSI	BAR	GPM	L/min	Amps
SF-1100 and SF-1105	0	0.0	10.7	40	9.3
	5	0.3	10.1	38	10.3
	10	0.7	8.7	33	12.3
	15	1.0	7.6	29	13.9

How to order:
Specify Mfr Part #
Example: SF-1100

Westward Parts can source many other special order items that are not listed in this catalogue, please visit our website at westwardparts.com or call us directly at 1-888-937-7278. Our team will help you find what you need.
The product images shown are for illustration purposes only and may not be an exact representation of the product.

Shurflo Mini-Bulk Kits, Parts, & Accessories

Mini-Bulk Pump Kits for SF-1100 Series

PENTAIR
HYPRO® · SHURFLO®

Mnf Part# 94-718-00

Mnf Part# 94-719-00

Mnf Part# 94-720-00 & 94-720-05

Mnf Part# 94-721-00

Mfr Part #	Description
94-718-00	Motor assembly kit used in any SF-1100 series pumps. Kit includes a 12 VDC motor with integrated pump lower housing, built-in on-off switch, 20 foot (6 m) cable, alligator clips and in-line fuse (Support bracket part # 84-1038-08)
94-719-00	Santoprene® diaphragm/lower housing/drive assembly - ready for installation
94-720-00	EPDM valve housing kits include a complete fully-assembled valve housing with o-ring seal* - ready for installation
94-720-05	Viton® valve housing kits include a complete fully-assembled valve housing with o-ring seal* - ready for installation
94-721-00	Polypropylene upper housing - includes o-ring seal* and pump head screws

* Manufacturer recommends replacing the O-ring seal whenever the pump has been dismantled.

How to order:
Specify Mfr Part #.
Example: 94-718-00

Mini-Bulk Flow Meter Kits for FM-1100 Series

Mnf Part# 94-732-00

Mnf Part# 94-733-00

Mnf Part# 94-734-00

Mnf Part# 94-735-00

Mnf Part# 94-736-00

Mfr Part #	Description
94-732-00	Flow meter electronics kit includes the front cover assembly and the electronic display with o-ring and batteries. Kit fits both pump-mounted and in-line meters (O-ring part # 5-040-154)
94-733-00	Flow meter housing seal cover kit includes the seal cover, o-ring and screws. Kit fits both pump-mounted and in-line meters. (O-ring part # 5-040-154)
94-734-00	Nutating chamber assembly, including o-ring seal. Kit fits both pump-mounted and in-line meters
94-735-00	90° meter housing with o-ring seal for pump-mounted flow meter. (O-ring part # 5-043-240)
94-736-00	Meter housing with o-ring seal for in-line flow meter. (O-ring part # 5-043-240)

How to order:
Specify Mfr Part #
Example: 94-718-00

Westward Parts can source many other special order items that are not listed in this catalogue, please visit our website at westwardparts.com or call us directly at 1-888-937-7278. Our team will help you find what you need.
The product images shown are for illustration purposes only and may not be an exact representation of the product.

Shurflo Mini-Bulk Kits, Parts, & Accessories

Other Mini-Bulk Parts & Accessories

PENTAIR
HYPRO® · SHURFLO®

Mnf Part# 3320-0064

Mnf Part# 8-727-00

Mnf Part# 94-712-00

Mnf Part# 94-716-00

Mnf Part# 94-717-00

Mnf Part# 94-723-00

Mnf Part# 2407-002

Mnf Part# 94-724-00

Mnf Part# 94-725-00

Mnf Part# 94-737-00

Mnf Part# 94-738-00

Mfr Part #	Description
3320-0064	Anti-flow back valve for EPA compliance
8-727-00	2 inch FNPT by 1 Inch FNPT polypropylene reducer coupling
94-712-00	2 inch male NPT by 2 inch female NPT street elbow fitting
94-716-00	1 inch NPT ball valve with spout
94-717-00	1 inch NPT x 12 foot EPDM discharge hose kit
94-723-00	Set of red and black alligator clips, including fuse holder
94-724-00	Replacement recirculation lid (Gasket part # 7-155-00)
94-725-00	Replacement recirculation cap
94-737-00	Recirculation system return hose kit - includes return hose and two hose clamps
94-738-00	Elbow, valve and coupling assembly - includes a 1 inch street elbow, 1 inch ball valve, and 1 inch bayonet tank coupling

How to order:
Specify Mfr Part #
Example: 3320-0064

Westward Parts can source many other special order items that are not listed in this catalogue, please visit our website at westwardparts.com or call us directly at 1-888-937-7278. Our team will help you find what you need.
The product images shown are for illustration purposes only and may not be an exact representation of the product.

Big Twin

PENTAIR
HYPRO® · SHURFLO®

Models 5206C and 5206C-H

- Port sizes: 3⁄4" inlet, 3⁄4" outlet
- Max. fluid temperature: 140°F/60°C
- Pump shaft rotation: bi-rotational
- Cups: Leather standard [fabric-reinforced (F) and Buna-N (R) available]
- Recommended to be used with Pulsation Dampener 3375-0017-2
- Weight: 18 lbs./8.2 kg

Mfr Model #	Max GPM	Max LPM	Max PSI	Max BAR	Max RPM	Shaft Output
5206C	8	30.3	400	27.6	800	1" solid shaft w/base
5206C-H	8	30.3	400	27.6	800	1-3/8" hollow shaft w/base
3430-0037	Leather cup kit					

Fabric Cups - Add Suffix "F" - (ie.: 5206C-F).
Buna-N Cups - Add Suffix "R" - (ie.: 5206C-R).

How to order:
Specify Mfr Model #
Example: 5206C

Pressure in PSI and BAR	GPM LPM	HP HP	GPM LPM	HP HP	GPM LPM	HP HP	GPM LPM	HP HP	GPM LPM	HP HP	GPM LPM	HP HP
	@400 RPM		@500 RPM		@540 RPM		@600 RPM		@700 RPM		@800 RPM	
25 PSI	3.9	.26	4.9	.29	5.4	.31	6.0	.34	7.0	.40	8.0	.46
1.7 BAR	14.8	.26	18.5	.29	20.4	.31	22.7	.34	26.5	.40	30.3	.46
100 PSI	3.9	.40	5.0	.46	5.4	.50	6.0	.56	7.0	.65	7.9	.74
6.9 BAR	14.8	.40	189	.46	20.4	.50	22.7	.56	26.5	.65	29.9	.74
200 PSI	4.0	.66	5.0	.75	5.4	.81	6.0	.90	6.9	1.1	7.8	1.2
13.8 BAR	15.1	.66	18.9	.75	20.4	.81	22.7	.90	26.1	1.1	29.5	1.2
300 PSI	3.9	.89	5.0	1.1	5.3	1.2	5.9	1.3	6.9	1.5	7.7	1.7
20.9 BAR	14.8	.89	18.9	1.1	20.1	1.2	22.3	1.3	26.1	1.5	29.1	1.7
400 PSI	3.9	1.1	4.9	1.4	5.3	1.5	5.9	1.6	6.9	1.9	7.7	2.2
27.6 BAR	14.8	1.1	18.5	1.4	20.1	1.5	22.3	1.6	26.1	1.9	29.1	2.2

Models 5210C and 5210C-H

- Port sizes: 3⁄4" inlet, 3⁄4" outlet
- Max. fluid temperature: 140°F/60°C
- Pump shaft rotation: bi-rotational
- Cups: Leather standard [fabric-reinforced (F) and Buna-N (R) available]
- Recommended to be used with Pulsation Dampener 3375-0015-2
- Weight: 18 lbs./8.2 kg

Mfr Model #	Max GPM	Max LPM	Max PSI	Max BAR	Max RPM	Shaft Output
5210C	10	37.5	400	27.6	600	1" solid shaft w/base
5210C-H	10	37.5	400	27.6	600	1-3/8" hollow shaft w/base
3430-0037	Leather cup kit					

Fabric Cups - Add Suffix "F" - (ie.: 5210C-F).
Buna-N Cups - Add Suffix "R" - (ie.: 5210C-R).

How to order:
Specify Mfr Model #
Example: 5210C

Pressure in PSI and BAR	GPM LPM	HP HP	GPM LPM	HP HP	GPM LPM	HP HP	GPM LPM	HP HP
	@400 RPM		@500 RPM		@540 RPM		@600 RPM	
25 PSI	7.3	.39	8.9	.57	9.4	.66	10.0	.73
1.7 BAR	27.6	.39	33.7	.57	35.6	.66	37.9	.73
100 PSI	7.3	.69	8.9	.87	9.4	.94	9.9	1.10
6.9 BAR	27.6	.69	33.7	.87	35.6	.94	37.5	1.10
200 PSI	7.2	1.2	8.8	1.5	9.3	1.6	9.9	1.7
13.8 BAR	27.2	1.2	33.3	1.5	35.2	1.6	37.5	1.7
300 PSI	7.2	1.7	8.8	2.0	9.3	2.2	9.8	2.3
20.7 BAR	27.2	1.7	33.3	2.0	35.2	2.2	37.1	2.3
400 PSI	7.2	2.1	8.7	2.6	9.2	2.7	9.8	3.0
27.6 BAR	27.2	2.1	32.9	2.6	34.8	2.7	37.1	3.0

Westward Parts can source many other special order items that are not listed in this catalogue, please visit our website at westwardparts.com or call us directly at 1-888-937-7278. Our team will help you find what you need.
The product images shown are for illustration purposes only and may not be an exact representation of the product.

Small Twin

Pumps

Series 5315, 5320, 5325 and 5330

PENTAIR
HYPRO® · SHURFLO®

- Port sizes: 1⁄2” inlet, 1⁄2” outlet
- Max. fluid temperature: 140°F/60°C
- Pump shaft rotation: bi-rotational
- Cups: Leather (-X) standard for 5300 Series [Buna-N (-RX), Teflon (-CX) available]
- Models require a pulsation dampener (such as a 3375-0012 pulse hose) on the discharge side
- Injector head available (sold separately part number 3396-0014)
- Weight: 10 lbs./4.5 kg

Mfr Model #	Max GPM	Max LPM	Max PSI	Max BAR	Max RPM	Shaft Output
5315C-X	1.5	5.7	500	34.5	1800	5⁄8" OD solid shaft
5320C-X	2.2	8.3	500	34.5	1800	5⁄8" OD solid shaft
5325C-X	2.5	9.5	500	34.5	1800	5⁄8" OD solid shaft
5330C-X	3	11.4	500	34.5	1800	5⁄8" OD solid shaft
5315C-HX	1.5	5.7	500	34.5	1800	5⁄8" ID hollow shaft
5320C-HX	2.2	8.3	500	34.5	1800	5⁄8" ID hollow shaft
5325C-HX	2.5	9.5	500	34.5	1800	5⁄8" ID hollow shaft
5330C-HX	3	11.4	500	34.5	1800	5⁄8" ID hollow shaft

Buna-N - add suffix "R" - (i.e :5320C-RX)
Teflon - add suffix "C" - (i.e :5320C-CX)

How to order:
Specify Mfr Model #
Example: 5315C-X

Model	5315		5320		5325		5330	
Pressure in PSI and BAR	GPM LPM	HP HP	GPM LPM	HP HP	GPM LPM	HP HP	GPM LPM	HP HP
	@1725 RPM		@1725 RPM		@1725 RPM		@1725 RPM	
50 PSI	1.56	.12	2.22	.21	2.56	.25	3.02	.37
3.4 BAR	5.9	.12	8.4	.21	9.7	.25	11.4	.37
100 PSI	1.52	.15	2.18	.28	2.54	.37	3.01	.49
6.9 BAR	5.8	.15	8.3	.28	9.6	.37	11.4	.49
200 PSI	1.50	.28	2.16	.43	2.52	.52	3.00	.74
13.8 BAR	5.7	.28	8.2	.43	9.3	.52	11.4	.74
300 PSI	1.47	.35	2.12	.57	2.50	.68	2.98	.92
20.7 BAR	5.6	.35	8.0	.57	9.5	.68	11.3	.92
400 PSI	1.45	.43	2.11	.71	2.10	.82	2.96	1.11
27.6 BAR	5.5	.43	8.0	.71	7.9	.82	11.2	1.11
500 PSI	1.44	.56	2.10	.83	2.44	.96	2.94	1.23
34.5 BAR	5.5	.56	7.9	.83	9.9	.96	11.1	1.23

Models 5324C and 5324C-H

- Port sizes: 1⁄2” inlet, 1⁄2” outlet
- Max. fluid temperature: 140°F/60°C
- Pump shaft rotation: bi-rotational
- Cups: Buna-N standard
- Model 5324 requires a pulsation dampener (such as a 3375-0012 pulse hose) on the discharge side
- Injector head available 3396-0006
- Weight: 11 lbs./5 kg

Mfr Model #	Max GPM	Max LPM	Max PSI	Max BAR	Max RPM	Shaft Output
5324C	2.9	11.0	800	55.2	1800	5⁄8" OD solid shaft
5324C-H	2.9	11.0	800	55.2	1800	5⁄8" ID hollow shaft

How to order:
Specify Mfr Model #
Example: 5324C

Pressure in PSI and BAR	GPM LPM	HP HP	GPM LPM	HP HP	GPM LPM	HP HP	GPM LPM	HP HP	GPM LPM	HP HP
	@600 RPM		@900 RPM		@1200 RPM		@1450 RPM		@1725 RPM	
100 PSI	.96	.12	1.51	.19	2.00	.28	2.42	.34	2.90	.40
6.9 BAR	3.6	.12	5.7	.19	7.6	.28	9.2	.34	11.0	.40
200 PSI	.94	.19	1.49	.30	1.98	.41	2.40	.50	2.89	.59
13.8 BAR	3.6	.19	5.6	.30	7.5	.41	9.1	.50	10.9	.59
300 PSI	.94	.26	1.48	.41	1.97	.55	2.38	.67	2.87	.80
20.7 BAR	3.6	.26	5.6	.41	7.5	.55	9.0	.67	10.9	.80
400 PSI	.95	.33	1.47	.50	1.96	.67	2.37	.83	2.85	1.00
27.6 BAR	3.6	.33	5.6	.50	7.4	.67	9.0	.83	10.8	1.00
500 PSI	.94	.39	1.47	.60	1.96	.81	2.36	.97	2.83	1.19
34.5 BAR	3.6	.39	5.6	.60	7.4	.81	8.9	.97	10.7	1.19
600 PSI	.93	.45	1.46	.69	1.95	.93	2.35	1.13	2.81	1.38
41.4 BAR	3.5	.45	5.5	.69	7.4	.93	8.9	1.13	10.6	1.38
700 PSI	.93	.52	1.46	.78	1.94	1.06	2.33	1.27	2.80	1.54
48.3 BAR	3.5	.52	5.5	.78	7.3	1.06	8.8	1.27	10.6	1.54
800 PSI	.93	.58	1.45	.87	1.93	1.16	2.32	1.42	2.79	1.69
55.2 BAR	3.5	.58	5.5	.87	7.3	1.16	8.8	1.42	10.6	1.69

Westward Parts can source many other special order items that are not listed in this catalogue, please visit our website at westwardparts.com or call us directly at 1-888-937-7278. Our team will help you find what you need.
The product images shown are for illustration purposes only and may not be an exact representation of the product.

Big Twin

Models 5321C, 5322C, 5321C-H and 5322C-H

PENTAIR
HYPRO® · SHURFLO®

- Port sizes: 1/2" inlet, 1/2" outlet
- Max. fluid temperature: 180°F/82°C
- Pump shaft rotation: bi-rotational
- Injector head available 3396-0006
- Models 5321 and 5322 require a pulsation dampener (such as a 3375-0012 pulse hose) on the discharge side
- Weight: 11 lbs./5 kg

Mfr Model #	Max GPM	Max LPM	Max PSI	Max BAR	Max RPM	Shaft Output	Plunger Material
5321C	2.2	8.3	1000	68.9	1800	5/8" OD solid shaft	Stainless Steel
5322C	2.2	8.3	1000	68.9	1800	5/8" OD solid shaft	Ceramic
5321C-H	2.2	8.3	1000	68.9	1800	5/8" ID hollow shaft	Stainless Steel
5322C-H	2.2	8.3	1000	68.9	1800	5/8" ID hollow shaft	Ceramic

How to order:
Specify Mfr Model #
Example: 5321C

Pressure in PSI and BAR	GPM / LPM	HP / HP	GPM / LPM	HP / HP	GPM / LPM	HP / HP	GPM / LPM	HP / HP
	@900 RPM		@1200 RPM		@1450 RPM		@1725 RPM	
100 PSI	1.1	0.2	1.5	.3	1.8	.4	2.2	.4
6.9 BAR	4.2	0.2	5.7	.3	6.8	.4	8.3	.4
300 PSI	1.1	.4	1.5	.5	1.8	.6	2.1	.7
20.7 BAR	4.2	.4	5.7	.5	6.8	.6	7.9	.7
500 PSI	1.1	.5	1.5	.6	1.8	.7	2.1	.8
34.5 BAR	4.2	.5	5.7	.6	6.8	.7	7.9	.8
700 PSI	1.1	.6	1.5	.8	1.8	.9	2.1	1.1
48.3 BAR	4.2	.6	5.7	.8	6.8	.9	7.9	1.1
1000 PSI	1.1	.8	1.4	1.0	1.8	1.2	2.1	1.4
69.0 BAR	4.2	.8	5.3	1.0	6.8	1.2	7.9	1.4

Model 53702

- Port sizes: 1/2" inlet, 1/2" outlet
- Max. fluid temperature: 180°F/82°C
- Pump shaft rotation: bi-rotational
- Plungers: polished ceramic
- Model 53702 requires a pulsation dampener (such as a 3375-0012 pulse hose) on the discharge side
- Inlet requirements: pressure feed 20-100 psi (1.4-6.9 bar)
- Weight: 11 lbs./5 kg

Mfr Model #	Max GPM	Max LPM	Max PSI	Max BAR	Max RPM	Shaft Output
53702	2.2	8.3	1000	68.9	3450	5/8" ID hollow shaft

How to order:
Specify Mfr Model #
Example: 53702

Pressure in PSI and BAR	GPM / LPM	HP / HP
	@3450 RPM	
100 PSI	2.3	.4
6.9 BAR	8.7	.4
300 PSI	2.2	.7
20.7 BAR	8.3	.7
500 PSI	2.1	.9
34.5 BAR	8.0	.9
700 PSI	2.1	1.2
48.3 BAR	8.0	1.2
1000 PSI	2.0	1.5
69 BAR	7.6	1.5

Westward Parts can source many other special order items that are not listed in this catalogue, please visit our website at westwardparts.com or call us directly at 1-888-937-7278. Our team will help you find what you need.
The product images shown are for illustration purposes only and may not be an exact representation of the product.

Small Twin

Pumps

Model 53703

PENTAIR
HYPRO® · SHURFLO®

- Max. fluid temperature: 180°F/82°C
- Port sizes: 1/2" inlet, 1/2" outlet
- Pump shaft rotation: bi-rotational
- Plungers: polished ceramic
- Model 53703 requires a pulsation dampener (such as a 3375-0012 pulse hose) on the discharge side
- Inlet requirements: pressure feed 20-100 psi (1.3 - 6.9 bar)
- Weight: 11 lbs./5 kg

Mfr Model #	Max GPM	Max LPM	Max PSI	Max BAR	Max RPM	Shaft Output
53703	2.3	8.7	1000	68.9	3100	5/8" ID hollow shaft

Requires a Special Order Gas Engine With 5/8" Shaft

How to order:
Specify Mfr Model #
Example: 53703

Pressure in PSI and BAR	GPM / LPM @3100 RPM	HP / HP @3100 RPM
100 PSI	2.3	0.4
6.9 BAR	8.7	0.4
300 PSI	2.2	.7
20.7 BAR	8.3	.7
500 PSI	2.1	.9
34.5 BAR	7.9	.9
700 PSI	2.1	1.2
48.3 BAR	7.9	1.2
1000 PSI	2.0	1.5
69.0 BAR	7.6	1.5

Hydraulically-Driven Pressure Washers

Pumps

Offering 3-4 gpm (11-15 lpm) Cleaning Power

PENTAIR
HYPRO® · SHURFLO®

The hydraulically-driven pressure washers are ideally suited for remote and explosion-proof environments where electricity cannot be used. These models are equipped with a hydraulic motor-driven, triplex plunger pump; and include an unloader, gauge, and quick disconnect. Some models include a chemical injector, 50' (15 m) pressure wash hose, trigger gun and insulated wand with adjustable Hi-Lo and Variable-Angle cleaning nozzle. Certain models are also equipped with a chemical injector.

- Anodized, die-cast aluminum crankcase
- Heavy-duty, corrosion-resistant brass manifold
- One-piece, forged-bronze connecting rods
- Stainless steel valves
- Hardened, stainless steel piston guides
- Solid ceramic plungers
- High pressure and low pressure packings of high-quality buna textile
- Heavy-duty, ball bearing supported crankshaft
- Sight glass and oil-level dipstick
- Hydraulic ports: 1/2" NPT inlet, 3/4" NPT outlet

How to order:
Specify Mfr Model #
Example: 1802C

Mfr Model #	Max GPM	Max LPM	Max PSI	Max BAR	Hydraulic Motor Requirements GPM	LPM	PSI	BAR	Description	Weight LBS	KG
1802C*	3	11.4	1000	68.9	5	18.9	1300	89.6	Forged Brass Head Triplex Pumps with hydraulic motor, adjustable unloader, gauge, 1/2" NPT input, 3/8" quick disconnect output	38	17.2
1803C	3	11.4	1000	68.9	5	18.9	1300	89.6		28	12.7
1804C*	3	11.4	1500	103.4	8	30.3	1900	131	Forged Brass Head Triplex Pumps with hydraulic motor, chemical injector, adjustable unloader, gauge, 3/4" GH input, 3/8" quick disconnect output	41	18.6
1805C	3	11.4	1500	103.4	8	30.3	1900	131		26	11.8
1806C*	3	11.4	2000	137.9	11	41.6	1300	89.6		41	18.6
1807C	3	11.4	2000	137.9	11	41.6	1300	89.6		26	11.8
1824C*	4	15.1	1500	103.4	8.5	32.2	2000	137.9		49	22.2
1825C	4	15.1	1500	103.4	8.5	32.2	2000	137.9		33	14.9
1826C*	4	15.1	2000	137.9	8.5	32.2	2000	137.9		49	22.2
1827C	4	15.1	2000	137.9	8.5	32.2	2000	137.9		33	14.9

Piston/Plunger Accessories

Pressure-Activated 3 Port Unloaders

PENTAIR
HYPRO® · SHURFLO®

Mfr Model #	Inlet/ Outlet	Bypass	Pressure Range PSI	Pressure Range Bar	Max GPM	Max LPM	Max Temp	Max Temp	Cup Material	Ref #
3390-0062D*	3/8" (M) NPT	1/4" (F) NPT	200-600	14-41	5	19	180° F	82° C	Buna-N	1
3390-0063D*			400-1000	28-69						
3390-0071D*T			400-1000	28-69						
3390-0067D*			800-1500	55-103						
3390-0072D*T			800-1500	55-103						
3390-0006	1/2" (F) NPT	1/2" (F) NPT	200-500	14-34	5	19	160° F	71° C	Buna-N	2
3390-0007			200-500	14-34	5	19			Leather	
3390-0037			300-1000	21-69	6	23			Buna-N/Teflon	
3390-0053	3/4" (F) NPT	3/4" (F) NPT	1000-2000	69-138	15	57	200° F	93° C	Buna-N	3

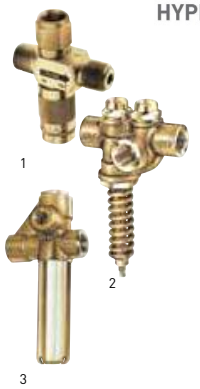

* Recommended for use with 5300 Series pumps
T For close-coupled bypass operation with Hypro 2200 and 2300 Series PowerLine Plus pumps, bypass not NPT. Use only with 8000-0007 and 80000-0008.

Pressure-Activated 3 or 5 Port Unloaders with Adjustment Knob

Mfr Model #	# of Ports	Inlet/ Outlet	Bypass	Max PSI	Max Bar	Max GPM	Max LPM	Max Temp	Max Temp	Cup Material	Ref #
3390-0079	3	3/8" (M)NPT	3/8" (F) NPT	2000	138	8	30	200° F	93° C	Buna-N	1
3390-0102	3	3/8" (M)NPT	1/4" (F)NPT	2600	179						2
3390-0076	3	3/8" (F)NPT	1/4" (F)NPT	3600	248						3
3390-0081	5	(2) 3/8" (F)NPT x 3/8" (F)NPT	(2) 1/4" (F)NPT	3600	248						4

Pressure-Activated Unloader/Bypass Kits

Mfr Model Number	Inlet/Outlet	Pressure Range PSI	Pressure Range Bar	Max GPM	Max LPM	Max Temp	Max Temp	Description
8000-0007	1/2" (F)NPT x 3/8" (M)NPT	400-1000	28-69	5	19	200° F	93° C	3 port unloader/bypass system with adjustable knob for 2200 and 2300 series PowerLine Plus Pumps.
8000-0008		800-1500	55-103					

Closed-Coupled Unloaders

Mfr Model Number	Inlet/Outlet	Max PSI	Max Bar	Max GPM	Max LPM	Injector Orifice Range GPM	Injector Orifice Range LPM	Max Temp	Max Temp	Description
3390-0104/3A	1/2" (F)NPT x 3/8" (M)NPT	2600	180	8	30	2.0-3.2	7.6-12.1	200° F	93° C	2 port unloader/bypass system with built-in chemical injector and adjustable knob.

For 2200 & 2300 series PowerLine Plus pumps.

Adjustable & Fixed Chemical Injectors

Mfr Model #	Inlet/Outlet	Max PSI	Max Bar	GPM Range	LPM Range	Max Temp	Max Temp	Type	Materials	Ref #
3396-0034/1.8	3/8" (F)NPT x 3/8" (M)NPT	3200	220	0-2.9	0-11	200° F	93° C	Fixed	Forged brass body; Stainless Steel Ball & Spring	1
3396-0031/2.1				3.0-4.0	11-15			Adjustable		2
3396-0033/2.3				4.0-5.0	15-19			Fixed		1

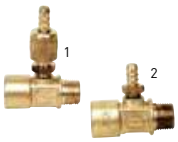

Piston/Plunger Accessories

Power Adjustable Injector for 2200/2300 Pumps

PENTAIR
HYPRO® · SHURFLO®

Mfr Model Number	Inlet	Max PSI	Max Bar	GPM Range	LPM Range	Max Temp	Max Temp	Materials	For Models	Description
3396-0011	1/8" (F) NPT	1500	103	2.0-4.8	7.5-18	140° F	60° C	Brass & Stainless Steel	2200 & 2300	9-step calibrated metering
3396-0025		3000	207			160° F	71° C		2200B-P & 2300B-P	

Power Adjustable Injector for 5300 Pump

Mfr Model Number	Inlet	Max PSI	Max Bar	GPM Range	LPM Range	Max Temp	Max Temp	Description	Materials	For Models
3396-0014	1/8" (F) NPT	500	34	1.5-3.0	5.7-11	140° F	60° C	9-step adjustable, needle-type mettering assembly for precise metering of soaps and liquids	Cast iron cylinder head; brass and stainless steel internal components	5300CX
3396-0006		1000	69	2	7.5					5321 & 5342C

Replaces standard head on Series 5300 and 5321 pumps

Regulator/Relief Valve - Provides smooth, constant pressure regulation

Mfr Model Number	Inlet/Outlet	Max PSI	Max Bar	Balanced Pressure		Max GPM	Max LPM	Max Temp	Max Temp	Materials
				PSI	Bar					
3300-0084	3/8" (F)NPT	2000	138	200-2000	14-138	7	26	160° F	71° C	Brass Body; Stainless Steel plunger & seat

High Flow Pressure Regulator/Relief Valve for 2535S & 2545S Pumps

Mfr Model #	Inlet/Outlet	Max PSI	Max Bar	Balanced Pressure		Max GPM	Max LPM
				PSI	Bar		
3300-0102	3/4" x 1/2"	2000	138	260-2000	18-138	53	200
3300-0103	1" x 1"					55	208

Thermal Relief Valve

Easy mount valve to safeguard pumps from damaging heat generaged within recirculating water systems. Easy to service without removing.

Mfr Model #	Inlet	Max PSI	Max Bar	Relief Temp	Relief Temp	Materials	Dimensions
3312-0004	1/2" (M) NPT	200	14	145° F	63° C	Brass, Stainless Steel & Buna-N	1-1/16" Hex x 1-11/16"
3312-0005*							1-1/16" Hex x 2-1/2"

* 3/16" barb fittings

High Flow Pressure Regulator/Relief Valve for 2535S & 2545S Pumps

Mfr Model #		Inlet	Max PSI	Max Bar	Max GPM	Max LPM	Max Temp	Max Temp
Screw Couplings	Connecting Nipples							
3341-0001	3341-0005	3/8" (F)NPT	3500	241	12	45	300° F	149° C
3341-0002	3341-0006	1/4" (F)NPT						
3341-0003	3341-0007	3/8" (M)NPT						
3341-0004	3341-0008	1/4" (M)NPT						

Piston and Plunger Pumps Accessories

Pulsation Dampeners

PENTAIR
HYPRO® · SHURFLO®

These quality-built pulsation dampeners protect your system from damage due to pulsation and vibration. Choose the size and capacity that meets your system's needs. In most applications, the recommended dampener charge is 1/2 of the operating pressure with a 2-piston pump and 2/3 of the operating pressure with a 3-piston pump.

Mfr Model Number	Inlet	Charge PSI	Charge Bar	Max GPM	Max LPM	For Models	Ref #
3375-0015-x	1" (F)NPT	200-1000	14-69	35	132	2500 Series	1
3375-0017-x	1/2" (F)NPT			6	23	2000 Series	2

Note: Replace 'x' with maximum charge designation; Example: 3375-0015-8 = 800 psi, 3375-0017-7 = 700 psi
Available in 100 psi increments from 200 psi to 1000 psi.

How to order:
Specify Mfr Model #
Example: 3375-0015-x

Westward Parts can source many other special order items that are not listed in this catalogue, please visit our website at westwardparts.com or call us directly at 1-888-937-7278. Our team will help you find what you need.
The product images shown are for illustration purposes only and may not be an exact representation of the product.

Centrifugal Pumps

1½" & 2" Poly Pumps

- Precision molded construction
- Lightweight
- Corrosion resistant
- Superior design
- Low maintenance
- EPDM standard, FKM available
- Engine warranty service available at authorized Briggs & Stratton® and Honda® dealers

2" POLY PUMPS W/GAS ENGINES		
MFR PART #	DESCRIPTION	HP
200PH-5	2" Poly Pump W/5.5 HP Honda® Engine	5.5
200PH-5RC	2" Poly Pump W/5.5 HP Honda® Engine W/ Roll Cage	5.5
200PH-5E	2" Poly Pump W/5.5 HP Honda® Engine W/ Electric Start	5.5
200PH-5ERC	2" Poly Pump W/5.5 HP Honda® Engine W/Electric Start W/ Roll Cage	5.5
200PH-5V	2" Poly Pump W/5.5 HP Honda® Engine W/FKM & 316 SS Seal	5.5
200PH6	2" Poly Pump W/6.5 HP Honda® Engine	6.5
200P6PRO	2" Poly Pump W/6.5 HP Briggs & Stratton® Engine Pro Series	6.5
200P6PRORC	2" Poly Pump W/6.5 HP Briggs & Stratton® Engine Pro Series W/Electric Start W/Roll Cage	6.5
200P6PROE	2" Poly Pump W/6.5 HP Briggs & Stratton® Engine Pro Series W/Electric Start	6.5
200P6PROV	2" Poly Pump W/6.5 HP Briggs & Stratton® Engine Pro Series W/FKM & 316 Ss Seal	6.5

WARNING! DO NOT RUN PUMP DRY, RESTRICT OR REDUCE PORT SIZES OR DEAD HEAD PUMP

WARNING! DO NOT USE WITH FLAMMABLE LIQUIDS

1½" & 2" POLY PUMP BEARING PEDESTALS		
MFR PART #	DESCRIPTION	HP
200PB	2" Poly Bearing Pedestal W/ ¾" Shaft & 3 Vane Impeller	N/A
200PB-V	2" Poly Bearing Pedestal W/ ¾" Shaft & 3 Vane Impeller W/Fkm & 316 SS Seal	N/A
205PB	2" Poly Bearing Pedestal W/ ¾" Shaft & 5 Vane Impeller	N/A
205PB-V	2" Poly Bearing Pedestal W/ ¾" Shaft & 5 Vane Impeller W/FKM & 316 SS Seal	N/A

1½" & 2" POLY PUMP ONLYS		
MFR PART #	DESCRIPTION	HP
200PO	2" Poly Pump Only* W/ 3 Vane Impeller	N/A
200PO-V	2" Poly Pump Only* W/3 Vane Impeller W/ FKM & 316 SS Seal	N/A
205PO	2" Poly Pump Only* W/ 5 Vane Impeller	N/A
205PO-V	2" Poly Pump Only* W/ 5 Vane Impeller W/FKM & 316 SS Seal	N/A

Note: Requires ¾" shaft on motor

How to order:
Specify Mfr Part #.
Example: 200PH-5

Westward Parts can source many other special order items that are not listed in this catalogue, please visit our website at westwardparts.com or call us directly at 1-888-937-7278. Our team will help you find what you need.
The product images shown are for illustration purposes only and may not be an exact representation of the product.

Centrifugal Pumps

1½" & 2" Poly Pumps

BANJO Liquid Handling Products

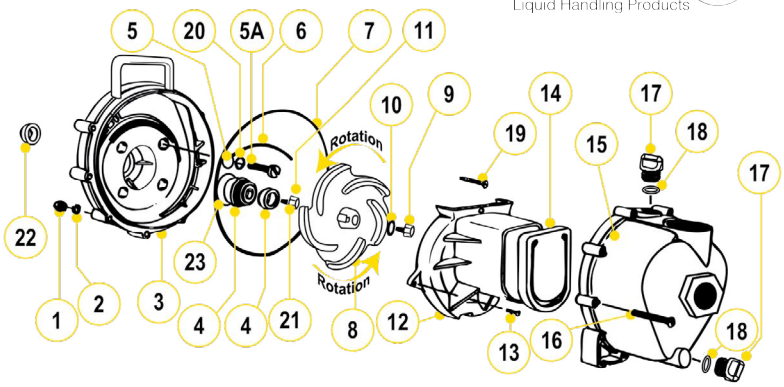

REPLACEMENT PARTS 2" POLY PUMPS

ITEM	MFR PART #	DESCRIPTION	QTY
1	V07019	SS Body Nuts	10
2	V07018	SS Lock Washers	10
3	12703A	Poly Pump Rear Bracket	1
4	12713	Seal Assembly	1
4	12733V	FKM Seal Assembly	1
5	12717	O-Ring For Screw Head	4
5	12717V	FKM O-Ring For Screw Head	4
5A	12715A	SS Bracket Screws	4
6	12754	O-Ring Segment	1
6	12754V	FKM O-Ring Segment	1
7	12719A	Body O-Ring	1
7	12719AV	FKM Body O-Ring	1
8	12772	5 Vane Impeller	1
8	12771A	3 Vane Impeller	1
9	12765A	SS Impeller Bolt	1
10	A204	O-Ring	1
10	A204V	FKM O-Ring	1
11	12775A	Impeller Hex Nut	1
12	12702A	Poly Pump Volute	1
13	12725	SS Volute Screws	2
14	12705	Poly Pump Check Valve	1
14	12705V	FKM Check Valve	1
15	12712A	Body Assembly	1
16	12720	SS Body Screws	10
17	12777	½" Plug	2
18	UV15163	Prime/Drain Plug O-Ring	2
18	UV15163V	FKM Prime/Drain Plug O-Ring	2
19	12900	SS Upper Volute Screw	1
20	12901	SS Rear Bracket Washer	4
21	12902A	Impeller Key	1
22	12716	Poly Pump Slinger	1
23	12710	O-Ring For Seal Assembly	1
23	12710V	FKM O-Ring For Seal Assembly	1
N/S	12882A	Bearing Pedestal	1
N/S	12099	7/16"-14 X 1.25" HHCS	1
KIT	12000A	5 Vane Impeller Repair Kit (Items 4-8, 10, 14, 18, 22, 23 & 12099)	1
KIT	12000AV	5 Vane Fkm Impeller Repair Kit (Items 4-8, 10, 14, 18, 22, 23 & 12099)	1
KIT	12999A	Pump Seal/O-Ring Kit (Items 5-7, 10, 18, 22, 23 & 12099)	1
KIT	12999AV	FKM Pump Seal/O-Ring Kit (Items 5-7, 10, 18, 22, 23 & 12099)	1

How to order:
Specify Mfr Part #.
Example: V07019

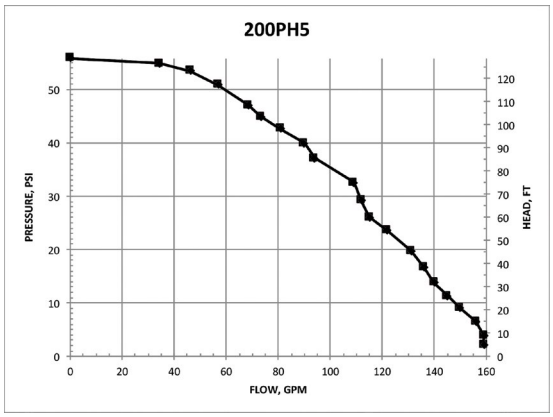

KITS 2" POLY PUMPS

MFR PART #	REPAIR KIT NO	SEAL KIT NO
200PH-5	12000A	12999A
200PH-5RC	12000A	12999A
200PH-5E	12000A	12999A
200PH-5ERC	12000A	12999A
200PH-5V	12000AV	12999AV
200PH6	12000A	12999A
200P6PRO	12000A	12999A
200P6PROE	12000A	12999A
200P6PRORC	12000A	12999A
200P6PROV	12000AV	12999AV
200PB	12003A	12999A
200PB-V	12003AV	12999AV
205PB	12000A	12999A
205PB-V	12000AV	12999AV
200PO	12003A	12999A
200PO-V	12003AV	12999AV
205PO	12000A	12999A
205PO-V	12000AV	12999AV

Centrifugal Pumps

2" Cast Iron Pumps With Hidraulic Motors

- Cast iron construction for rugged dependable service
- Stainless steel hardware
- FKM double seal contained in glycol reservoir
- Replaceable inlet and outlet flanges
- Dynamically balanced impeller
- Hydraulic fluid capacity is minimum 6 gallons and maximum 10 gallons
- Open or closed system
- 12 HP motor
- Recommendation to use the motor spool control valve or a suitable equivalent. The lack of such a valve in this circuit may cause failure to the hydraulic motor.

WARNING! DO NOT RUN PUMP DRY, RESTRICT OR REDUCE PORT SIZES OR DEAD HEAD PUMP

WARNING! DO NOT USE WITH FLAMMABLE LIQUIDS

2" CAST IRON PUMPS W/ HYDRAULIC MOTORS		
MFR PART #	DESCRIPTION	HP
200PIHA	2" Cast Iron Pump Only Without Hydraulic Motor	N/A

SPOOL VALVE ASSEMBLY DIAGRAM

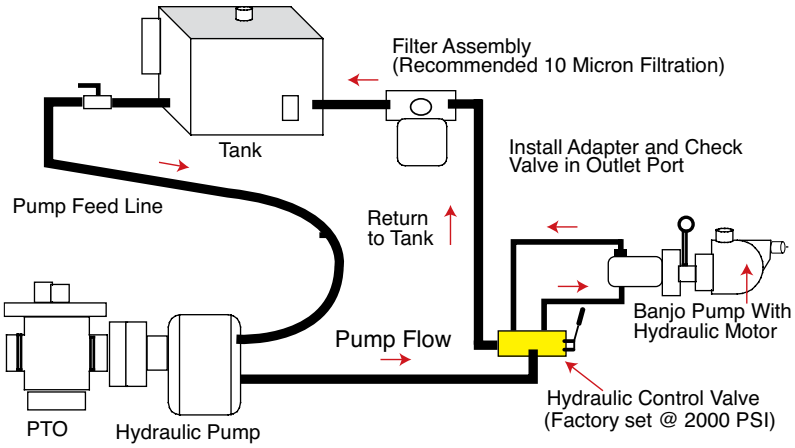

HYDRAULIC MOTOR SPOOL VALVE		
MFR PART #	DESCRIPTION	HP
HSV1000	HYDRAULIC MOTOR SPOOL VALVE	N/A

How to order:
Specify Mfr Part #.
Example: HSV1000

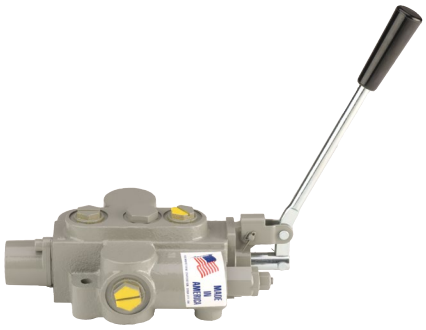

Westward Parts can source many other special order items that are not listed in this catalogue, please visit our website at westwardparts.com or call us directly at 1-888-937-7278. Our team will help you find what you need.
The product images shown are for illustration purposes only and may not be an exact representation of the product.

Centrifugal Pumps

2” Cast Iron Pumps With Hidraulic Motors

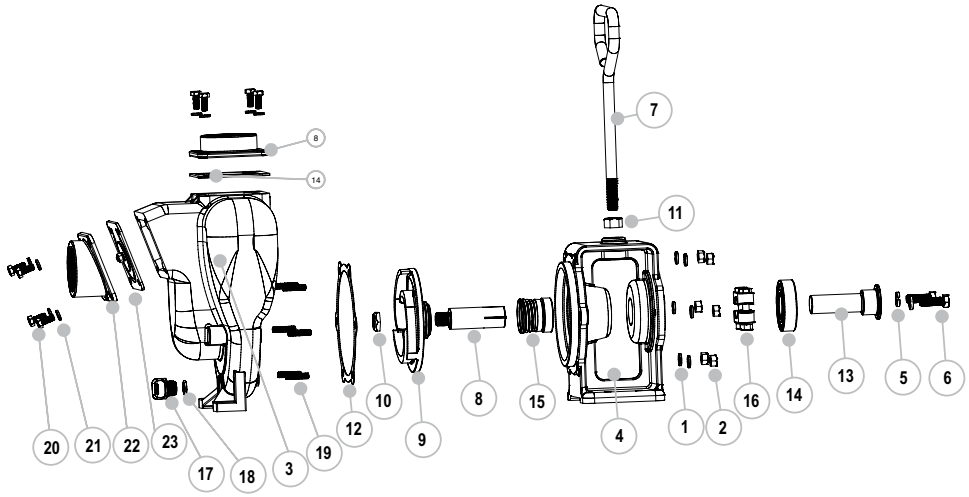

REPLACEMENT PARTS 2" CAST IRON PUMPS			
ITEM	MFR PART #	DESCRIPTION	QTY
1	V10118	5/16" Split Lock Washer	6
2	V10119	5/16"-18 Hex Nut	6
3	17126	Pump Housing	1
4	17049A	Hydraulic Adapter	1
5	V20018	3/8" Lock Washer	2
6	18010SS	3/8"-16 X 1.25" HHCS	2
7	15022	Handle	1
8	17007	7/8" Sleeve Drive For Hydraulic Motor	1
9	17008	5" Impeller	1
10	17009B	5/8" Impeller Nut	1
11	17010	½" Hex Nut - 13UNF-RH	1
12	17018	Gasket Adapter	1
13	17055A	Hydraulic Adapter Shaft	1
14	17056	SKF 6206-2RS1 Bearing	1
15	17135	FKM Seal Assembly	1
16	17024	7/8" Clamp, No Key	1
17	12777	½" Plug	1
18	UV15163	O-Ring	1

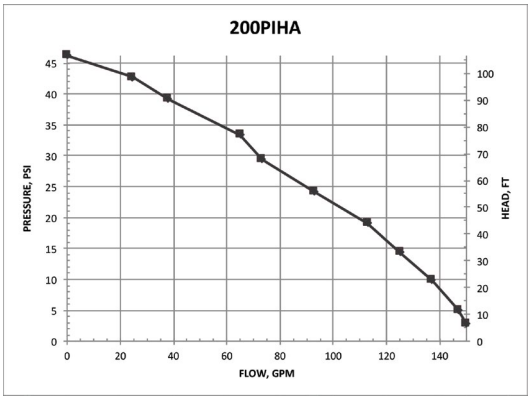

How to order:
Specify Mfr Part #.
Example: V10118

Westward Parts can source many other special order items that are not listed in this catalogue, please visit our website at westwardparts.com or call us directly at 1-888-937-7278. Our team will help you find what you need.
The product images shown are for illustration purposes only and may not be an exact representation of the product.

Centrifugal Pumps

3” M332 Series Cast Iron Manifold Wet Seal Pumps

- Run dry capability
- Cast iron construction for rugged dependable service
- Carbon ceramic seal with stainless steel cup and spring with FKM rubber
- Replaceable inlet and outlet flanges
- Dynamically balanced impeller
- Heavy duty slinger seal on motor shaft
- Large weep holes between pump end and engine
- Due to weight and size of pumps, Banjo ships these by truck only.

M332 SERIES CAST IRON WET SEAL PUMPS W/GAS ENGINES

MFR PART #	DESCRIPTION	HP	QTY
M332PIH13W	3" Manifold Cast Iron Wet Seal Pump W/13 HP Honda® Engine W/Electric Start & Pull Rope	13	1

M332 SERIES CAST IRON WET SEAL PUMPS W/ELECTRIC MOTORS

MFR PART #	DESCRIPTION	HP	QTY
M332PIE10W	3" Manifold Cast Iron Wet Seal Pump W/10HP Three Phase Electric Motor	10	1
M332PIE101W	3" Manifold Cast Iron Wet Seal Pump W/10HP Single Phase Electric Motor	10	1

M332 SERIES CAST IRON WET SEAL BEARING PEDESTAL PUMPS

MFR PART #	DESCRIPTION	HP	QTY
M332PBIW	2" Manifold Cast Iron Wet Seal Pump W/ Bearing Pedestal W/ ¾" Shaft	N/A	1

M332 SERIES CAST IRON WET SEAL BEARING PEDESTAL PUMPS

MFR PART #	DESCRIPTION	HP	QTY
M332POIW	3" Manifold Cast Iron Wet Seal Pump Only	N/A	1

How to order:
Specify Mfr Part #.
Example: M332PIH13W

Westward Parts can source many other special order items that are not listed in this catalogue, please visit our website at westwardparts.com or call us directly at 1-888-937-7278. Our team will help you find what you need.
The product images shown are for illustration purposes only and may not be an exact representation of the product.

Centrifugal Pumps

2” M222 Series Cast Iron Manifold Wet Seal Pumps

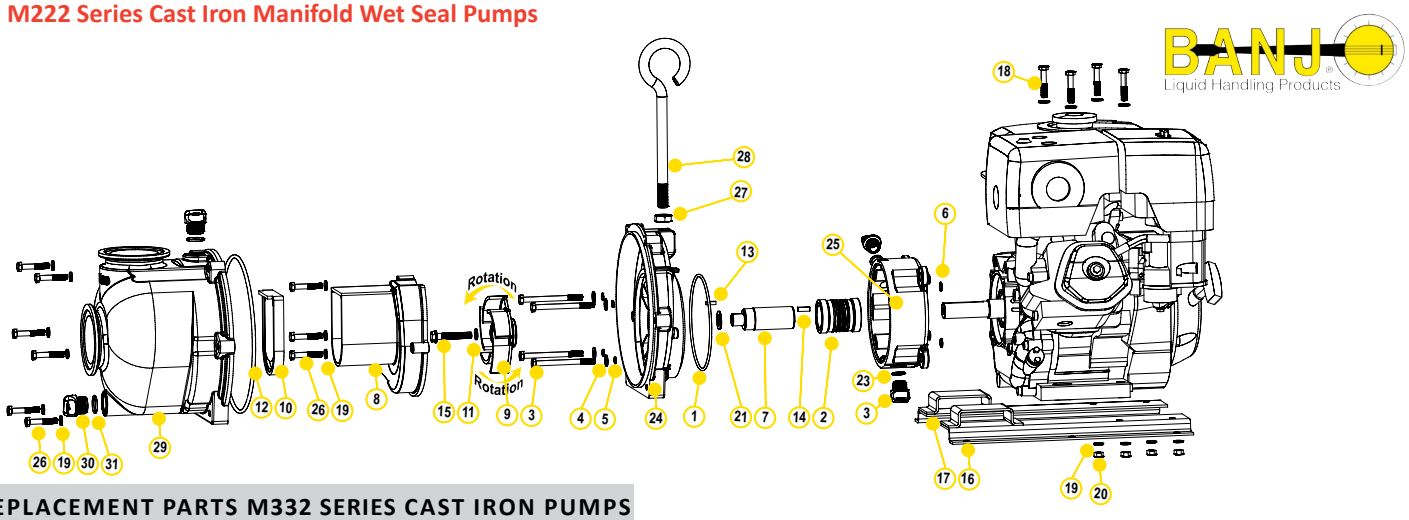

REPLACEMENT PARTS M332 SERIES CAST IRON PUMPS

ITEM	MFR PART #	DESCRIPTION	QTY
1	13719	O-Ring	1
2	15035E	EPDM Mechanical Seal Assembly	1
3	13034	5/16" - 24 X 3¾" HHCS	4
4	12901	5/16" Flat Washer	8
5	12717	O-RING For Bracket Screw	4
6	12709	O-Ring	4
7	13055	Adapter Shaft	1
8	19702	Volute	1
9	19772SS	5 Vane Impeller	1
9	15772	Impeller (M332PBIW)	1
10	12705	Check Valve	1
11	A204	O-Ring	1
12	12719A	Body O-Ring	1
13	12902A	Impeller Key	1
14	16901	¼" SQ X ¾" Key Stock	1
15	13766	3/8" - 24 X 2¼" HFS	1
16	18135B	Z-Rail	1
17	18135A	Z-Rail	1
18	17029	5/16" - 18 X 1¾" HHCS	4
19	V10118	5/16" Lock Washer	13
20	V10119	5/16" Hex Nut	4
21	CV10175	Gasket	2
22	12777	½" Plug	2
23	UV15163	O-Ring	2
24	19703W	Rear Bracket	1
25	19201W	Wet Seal Reservoir	1
26	12715A	5/16"- 24 X 1¾" HHCS	9
27	18034	5/8"-11 Jam Nut	1
28	18033	Pump Handle	1
29	M19712X	Pump Body	1
30	13777	¾" Plug	2
31	13778	O-Ring	2

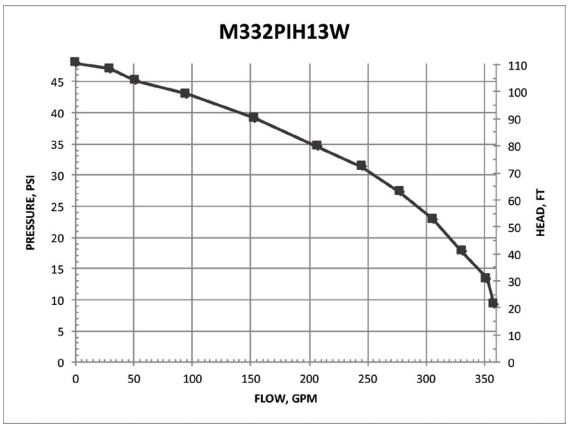

How to order:
Specify Mfr Part #.
Example: 13719

Westward Parts can source many other special order items that are not listed in this catalogue, please visit our website at westwardparts.com or call us directly at 1-888-937-7278. Our team will help you find what you need. The product images shown are for illustration purposes only and may not be an exact representation of the product.

Diaphragm Pumps

FLOJET®

Self- Priming- Wet and Dry
- Dry vertical lift from 2.5 (0.8m) up to an outstanding 27.9' (8.5m)

Can Run Dry without Damage
- Flojet diaphragm pumps can run dry for extended periods with no damage
- Compatible with a wide range of chemicals
- Sealless design (no shaft seal, so less leak issues)

Compact Size and Low Weight
- Highest flow rates for their size
- Plug-in ports for easy installation and servicing
- Flojet pumps can be mounted easily anywhere with functional mounting platforms and simple connections — fit it anywhere and plumb up

Service Kits Available
- Modular design
- Low-cost, low-maintenance design means a trouble-free service life
- Spare parts and accessories are readily available and easy to install

The Principle Behind Positive Displacement Diaphragm Pumps

Motor Driven

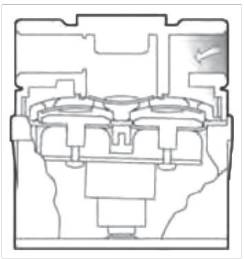

Self-priming design allows pumps to create suction to draw fluid into pump without manual priming.

Fluid enters inlet port and is drawn through inlet check valve when piston moves away from the check valve

As piston moves toward the check valve assembly, the fluid is forced through the outlet check valve and out of the pump.

Air Driven

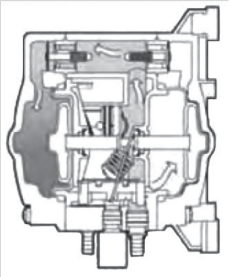

Air pressure directed by the stall-proof shuttle valve pulls the left diaphragm to create suction for the fluid being pumped.

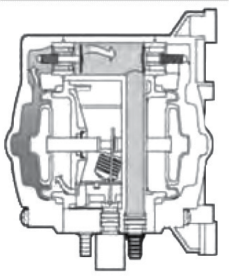

Pressurized air is redirected behind the left diaphragm, causing a discharge stroke and forcing the fluid out. At the same time, the right diaphragm draws in more fluid.

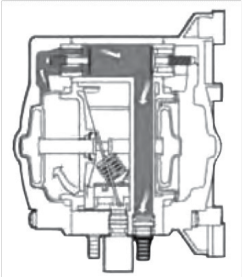

Air is redirected to the right side by the shuttle valve as it repeats the above cycle, forcing fluid out at the right diaphragm and drawing fluid in at the left.

GAS WARNING
No pump manufactured by Xylem should be used for gasoline or any fluid with a flash point below 100°F (38°C).

Diaphragm Pumps

Duplex II Series

FLOJET®

The Duplex II series of pumps incorporates the best technology and features developed by Flojet. Everything from the back-flow preventer, check valves, bearings and diaphragm assembly to the motor, has been designed to make this the most reliable diaphragm pump available. Higher efficiency of the pump is evident in the longer life of the motor pump unit. The diaphragm design combined with the new valves makes the pump capable of pulling higher dry vacuum. Duplex II is available in various performance ranges and voltages, and with a choice of elastomers, making it easily adaptable to a diverse range of applications.

Features Performance:

- Self-priming up to 8' (2.4m)
- Can run dry without damage
- Chemically resistant materials
- Internal bypass standard
- Built-in back-flow preventer
- Heavy duty ball bearing drive system
- UL, CSA and CE models available

Specification:

PUMP DESIGN	Positive displacement two-piston design
VOLTAGE	12V DC, 24V DC, 115V AC, 230V AC
MAX FLOW RATE	High Pressure — 2.2 GPM (8.3 LPM) Medium and Low Pressure — 1.6 GPM (6.1 LPM)
CYCLE	50/60Hz for AC models
MAX PRESURE	100 psi (6.9 bar)
PRESSURE SWITCH SETTING	15 psi (1.3 bar), 30 psi (2.1 bar), 45 psi (3.1 bar), 60 psi (4.1 bar), 80 psi (5.5 bar) and 100 psi (6.8 bar)
SELF-PRIMING	Up to 8' (2.4m)
PORTS	3/8" (10mm) NPT female
MOTOR	Permanent magnet with solid state rectifier
WETTED PARTS	Polypropylene, FKM, buna or EPDM
WEIGHT	4–5lb (1.8–2.3kg)

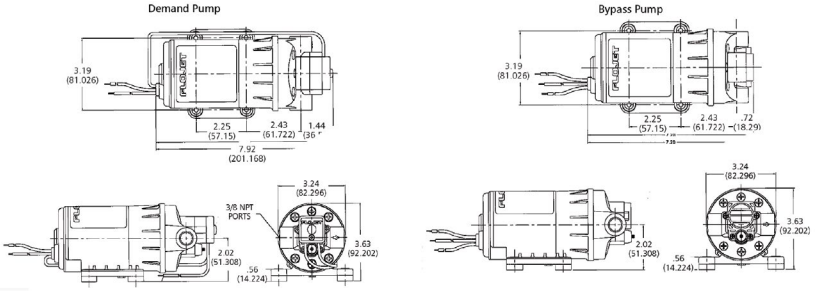

MFR MODEL #	CE	VOLTAGE	OPEN FLOW	SWITCH	BYPASS	MAX AMP DRAW	DIAPHRAGM	CHECK VALVE	CURVE #	NOTES
D3732H5011	D3732H5011RL	230V AC	1.6 GPM (6.1 LPM)	60 psi (4.1 bar)	40 psi (2.8 bar)	0.6A	EP/PP blend	EPDM	3	
D3732V1311	D3732V1311RL	230V AC	1.6 GPM (6.1 LPM)	No	50 psi (3.4 bar)	0.4A	FKM	FKM	4	
D3732V5011	D3732V5011RL	230V AC	1.6 GPM (6.1 LPM)	60 psi (4.1 bar)	40 psi (2.8 bar)	0.6A	FKM	FKM	3	
D3735B7011	D3735B7011RL	230V AC	2 GPM (7.6 LPM)	100 psi (6.9 bar)	80 psi (5.5 bar)	0.5A	Buna	Buna	5	
D3735H7011	D3735H7011RL	230V AC	2 GPM (7.6 LPM)	100 psi (6.9 bar)	80 psi (5.5 bar)	0.5A	EP/PP blend	EPDM	5	
D3231B1311	D3231B1311R	24V DC	1.6 GPM (6.1 LPM)	No	50 psi (3.4 bar)	3.5A	Buna	Buna	4	
D3231B5011	D3231B5011R	24V DC	1.6 GPM (6.1 LPM)	60 psi (4.1 bar)	40 psi (2.8 bar)	3.5A	Buna	Buna	3	
D3231H1311	D3231H1311R	24V DC	1.6 GPM (6.1 LPM)	No	50 psi (3.4 bar)	3.5A	EP/PP blend	EPDM	4	
D3231H5011	D3231H5011R	24V DC	1.6 GPM (6.1 LPM)	60 psi (4.1 bar)	40 psi (2.8 bar)	3.5A	EP/PP blend	EPDM	3	
D3231V1311	D3231V1311R	24V DC	1.6 GPM (6.1 LPM)	No	50 psi (3.4 bar)	3.5A	FKM	FKM	4	
D3231V5011	D3231V5011R	24V DC	1.6 GPM (6.1 LPM)	60 psi (4.1 bar)	40 psi (2.8 bar)	3.5A	FKM	FKM	3	
D3235B7011	D3235B7011R	24V DC	2 GPM (7.6 LPM)	100 psi (6.9 bar)	80 psi (5.5 bar)	4.5A	Buna	Buna	5	
D3235H7011	D3235H7011R	24V DC	2 GPM (7.6 LPM)	100 psi (6.9 bar)	80 psi (5.5 bar)	4.5A	EP/PP blend	EPDM	5	
D3221V1211	D3221V1211R	24V DC	1.1 GPM (4.3 LPM)	No	30 psi (2.1 bar)	1.5A	FKM	FKM	1	
D3221V3011	D3221V3011R	24V DC	1.1 GPM (4.3 LPM)	30 psi (2.1 bar)	No	1.5A	FKM	FKM	2	
D1335E7011	N/A	36V DC	2 GPM (7.6 LPM)	100 psi (6.9 bar)	80 psi (5.5 bar)	0.5A	EPDM	EPDM	5	

How to order:
Specify Mfr Model #
Example: D3732H5011

Continued on next Page

Diaphragm Pumps

Duplex II Series

FLOJET®

MFR MODEL #	CE	VOLTAGE	OPEN FLOW	SWITCH	BYPASS	MAX AMP DRAW	DIAPHRAGM	CHECK VALVE	CURVE #	NOTES
D3631B1311	N/A	115V AC	1.6 GPM (6.1 LPM)	No	50 psi (3.4 bar)	0.6A	Buna	Buna	4	
D3631B5011	N/A	115V AC	1.6 GPM (6.1 LPM)	60 psi (4.1 bar)	40 psi (2.8 bar)	0.6A	Buna	Buna	3	
D3631V1311	N/A	115V AC	1.6 GPM (6.1 LPM)	No	50 psi (3.4 bar)	0.6A	FKM	FKM	4	
D3631V5011	N/A	115V AC	1.6 GPM (6.1 LPM)	60 psi (4.1 bar)	40 psi (2.8 bar)	0.6A	FKM	FKM	3	
D3635B7011	N/A	115V AC	2 GPM (7.6 LPM)	100 psi (6.9 bar)	80 psi (5.5 bar)	0.8A	Buna	Buna	5	
D3835B5011	N/A	115V AC	2 GPM (7.6 LPM)	60 psi (4.1 bar)	40 psi (2.8 bar)	0.6A	Buna	Buna	3	6' cord
D3835H5011	N/A	115V AC	2 GPM (7.6 LPM)	60 psi (4.1 bar)	40 psi (2.8 bar)	0.6A	EP/PP blend	EPDM	3	6' cord
D3835V5011	N/A	115V AC	2 GPM (7.6 LPM)	60 psi (4.1 bar)	40 psi (2.8 bar)	0.6A	FKM	FKM	3	6' cord
D21X003	N/A	12V DC	1.6 GPM (6.1 LPM)	No	No	9A	EP/PP blend	FKM	6	Inline fuse and rocker switch
D21X005	N/A	12V DC	2 GPM (7.6 LPM)	60 psi (4.1 bar)	40 psi (2.8 bar)	7A	EP/PP blend	FKM	3	Inline fuse and rocker switch
D3131B1311	D3131B1311R	12V DC	1.6 GPM (6.1 LPM)	No	50 psi (3.4 bar)	7A	Buna	Buna	4	
D3131B5011	D3131B5011R	12V DC	1.6 GPM (6.1 LPM)	60 psi (4.1 bar)	40 psi (2.8 bar)	7A	Buna	Buna	3	
D3131H1311	D3131H1311R	12V DC	1.6 GPM (6.1 LPM)	No	50 psi (3.4 bar)	7A	EP/PP blend	EPDM	4	
D3131H5011	D3131H5011R	12V DC	1.6 GPM (6.1 LPM)	60 psi (4.1 bar)	40 psi (2.8 bar)	7A	EP/PP blend	EPDM	3	
D3131V1311	D3131V1311R	12V DC	1.6 GPM (6.1 LPM)	No	50 psi (3.4 bar)	7A	FKM	FKM	4	
D3131V5011	D3131V5011R	12V DC	1.6 GPM (6.1 LPM)	60 psi (4.1 bar)	40 psi (2.8 bar)	7A	FKM	FKM	3	
D3135B7011	D3135B7011R	12V DC	2 GPM (7.6 LPM)	100 psi (6.9 bar)	80 psi (5.5 bar)	9A	Buna	Buna	5	
D3135H7011	D3135H7011R	12V DC	2 GPM (7.6 LPM)	100 psi (6.9 bar)	80 psi (5.5 bar)	9A	EP/PP blend	EPDM	5	
D3121V1211	D3121V1211R	12V DC	1.1 GPM (4.3 LPM)	No	30 psi (2.1 bar)	3A	FKM	FKM	1	
D3121V3011	D3121V3011R	12V DC	1.1 GPM (4.3 LPM)	30 psi (2.1 bar)	No	3A	FKM	FKM	2	
D3135B1411	D3135B1411R	12V DC	2 GPM (7.6 LPM)	No	70 psi (4.8 bar)	7A	Buna	Buna	6	
D71X000	N/A	12V DC	2 GPM (7.6 LPM)	No	50 psi (3.4 bar)	8A	Buna	Buna	6	Heavy duty motor
D71X001	N/A	12V DC	2 GPM (7.6 LPM)	No	50 psi (3.4 bar)	8A	Buna	Buna	6	Heavy duty motor and discharge left
D2131F5011	N/A	12V DC	1.6 GPM (6.1 LPM)	60 psi (4.1 bar)	40 psi (2.8 bar)	0.6A	EP/PP blend	FKM	3	
D2131F5011	N/A	12V DC	1.6 GPM (6.1 LPM)	60 psi (4.1 bar)	40 psi (2.8 bar)	0.6A	EP/PP blend	FKM	3	Heavy duty motor
D27X007	N/A	12V DC	1.6 GPM (6.1 LPM)	No	50 psi (3.4 bar)	10A	Buna	FKM	4	Inline fuse and rocker switch
D3732B1311	D3732B1311RL	230V AC	1.6 GPM (6.1 LPM)	No	50 psi (3.4 bar)	0.4A	Buna	Buna	4	
D3732B5011	D3732B5011RL	230V AC	1.6 GPM (6.1 LPM)	60 psi (4.1 bar)	40 psi (2.8 bar)	0.6A	Buna	Buna	3	
D3732H1311	D3732H1311RL	230V AC	1.6 GPM (6.1 LPM)	No	50 psi (3.4 bar)	0.4A	EP/PP blend	EPDM	4	

How to order:
Specify Mfr Model #
Example: D3631B1311

Diaphragm Pumps

Quad Series

FLOJET®

Flojet developed the Quad pumps to deliver higher flows up to 5 GPM (18.9 LPM) using a four-piston design with excellent self-priming capability.

Features:

- Built-in pressure switch automatically starts and stops pump when discharge valve opens and closes
- Compact design and plug-in port fittings make installation easy
- Can run dry without damage and handle liquids up to 130°F (54°C)
- Excellent self-priming capability; pump may be located above the liquid level

Specification:

VOLTAGE	12V and 24V DC, 115V and 230V AC
FLOW RATE	3.5–5 GPM (13.2–18.9 LPM) nominal
MAX PRESSURE	40 psi (2.8 bar)
PRESSURE SWITCH SETTING	45 psi (3.2 bar) cut-out
SELF-PRIMING	Up to 8' (2.4m) vertical height
PORTS*	Plug-in ports 1/2" (13mm) or 3/4" (19mm) hose barb standard
WEIGHT	4lb (2kg)

MFR MODEL #	CE	VOLTAGE	OPEN FLOW	SWITCH	MAX AMP DRAW	DIAPHRAGM	CHECK VALVE	FITTINGS	COMMENTS
04100113	N/A	12V	5 GPM (19 LPM)	No	10A	Buna/PP blend	Buna	3/4" (19mm) HB ST	
04100143	R4100143	12V	5 GPM (19 LPM)	No	10A	EP/PP blend	EPDM	3/4" (19mm) HB ST	
04100505	N/A	12V	3.7 GPM (14 LPM)	No	10A	EP/PP blend	FKM	1/2" (13mm) HB ST	
04300112	N/A	12V	3.7 GPM (14 LPM)	45 psi (3.1 bar)	10A	Buna/PP blend	Buna	1/2" (13mm) HB ST	
04300142	R4300142	12V	3.7 GPM (14 LPM)	45 psi (3.1 bar)	9A	EP/PP blend	EPDM	1/2" (13mm) HB ST	
04300143	R4300143	12V	5 GPM (19 LPM)	45 psi (3.1 bar)	13A	EP/PP blend	EPDM	3/4" (19mm) HB ST	
04300500	R4300500	12V	3.7 GPM (14 LPM)	45 psi (3.1 bar)	10A	EP/PP blend	FKM	1/2" (13mm) HB ST	
04300504	R4300504	12V	5 GPM (19 LPM)	45 psi (3.1 bar)	13A	EP/PP blend	FKM	3/4" (19mm) HB ST	
04300506	R4300506	12V	5 GPM (19 LPM)	45 psi (3.1 bar)	13A	Buna/PP blend	Buna	3/4" (19mm) HB ST	
04300528	N/A	12V	3.8 GPM (14.5 LPM)	45 psi (3.1 bar)	11A	EP/PP blend	FKM	1/2" (13mm) HB ST and GH x 1/2" (13mm) MNPT	Inline connector, rocker switch
04100343	R4100343	24V	5 GPM (19 LPM)	No	4A	EP/PP blend	EPDM	3/4" (19mm) HB ST	
04300342	R4300342	24V	3.7 GPM (14 LPM)	45 psi (3.1 bar)	5A	EP/PP blend	EPDM	1/2" (13mm) HB ST	
04300343	R4300343	24V	5 GPM (19 LPM)	45 psi (3.1 bar)	5A	EP/PP blend	EPDM	3/4" (19mm) HB ST	
04100511	N/A	36V	5 GPM (19 LPM)	No	2.3A	EP/PP blend	FKM	3/4" (19mm) HB ST	
04100500	R4100500	115V AC	3.7 GPM (14 LPM)	No	1.2A	EP/PP blend	EPDM	1/2" (13mm) HB ST	
04100502	N/A	115V AC	5 GPM (19 LPM)	No	1.2A	EP/PP blend	FKM	3/4" (19mm) HB ST	
04300042	N/A	115V AC	3.7 GPM (14 LPM)	45 psi (3.1 bar)	1A	EP/PP blend	EPDM	1/2" (13mm) HB ST	
04300043	N/A	115V AC	5 GPM (19 LPM)	45 psi (3.1 bar)	1A	EP/PP blend	EPDM	3/4" (19mm) HB ST	
04300501	R4300501	115V AC	3.7 GPM (14 LPM)	45 psi (3.1 bar)	1.5A	EP/PP blend	FKM	1/2" (13mm) HB ST	
04300515	N/A	115V AC	5 GPM (19 LPM)	45 psi (3.1 bar)	1.5A	EP/PP blend	FKM	3/4" (19mm) HB ST	
04300525	N/A	115V AC	5 GPM (19 LPM)	45 psi (3.1 bar)	1.5A	EP/PP blend	FKM	3/4" (19mm) HB ST	6' (1.8m) cord
04300529	N/A	115V AC	3 GPM (11.5 LPM)	40 psi (2.8 bar)	1.8A	EP/PP blend	FKM	1/2" (13mm) HB ST	Cord/continuous duty/induction motor
04300531	N/A	115V AC	3 GPM (11.5 LPM)	40 psi (2.8 bar)	1.8A	EP/PP blend	EPDM	1/2" (13mm) HB ST	Cord/continuous duty/induction motor
I102010211	N/A	115V AC	5 GPM (19 LPM)	No	1.5A	EP/PP blend	FKM	3/4" (19mm) HB ST	6' (1.8m) cord
I103050211	N/A	115V AC	5 GPM (19 LPM)	No	1.5A	EP/PP blend	EPDM	3/4" (19mm) HB ST	6' (1.8m) cord
I304010110	N/A	115V AC	3.7 GPM (14 LPM)	45 psi (3.1 bar)	1.5A	EP/PP blend	FKM	1/2" (13mm) HB ST	6' (1.8m) cord
R4300538	R4300538	230V AC	4.5 GPM (17 LPM)	35 psi (2.4 bar)	2A	EP/PP blend	EPDM	3/4" (19mm) HB ST and 1/2" (13mm) HB ELB	Continuous duty/ induction motor/
R4300539	R4300539	230V AC	3.5 GPM (13 LPM)	35 psi (2.4 bar)	2A	EP/PP blend	EPDM	3/4" (19mm) HB ST and 1/2" (13mm) HB ELB	Continuous duty/ induction motor/
R4320242	R4320242	230V AC	3.7 GPM (14 LPM)	35 psi (2.4 bar)	N/A	EP/PP blend	EPDM	1/2" (13mm) HB ST	
R4320243	R4320243	230V AC	5 GPM (19 LPM)	35 psi (2.4 bar)	0.7A	EP/PP blend	EPDM	3/4" (19mm) HB ST	
R4320252	R4320252	230V AC	3.7 GPM (14 LPM)	35 psi (2.4 bar)	0.6A	EP/PP blend	FKM	1/2" (13mm) HB ST	
R4320253	R4320253	230V AC	5 GPM (19 LPM)	35 psi (2.4 bar)	0.7A	EP/PP blend	FKM	3/4" (19mm) HB ST	

How to order:
Specify Mfr Model #
Example: 04100113

Diaphragm Pumps

2100 Series FloJet Pumps

FLOJET®

- Flojet 2100 Delivers Flows up to 2.0 GPM (7.6 l/min) and operating pressures up to 50 PSI (3.5 bar)
- Can run dry without damage
- Excellent self-priming capability
- Powerful Permanent Magnet Motor with low current draw

Westward Part#	Mfr Part #	Description	Max PSI	Max GPM
SPP2130-032A	02130-032A	Pump and Motor unit, 115 Volt, 1.8 Gpm, 95 Psi. Nylon Body Construction, W/ Epdm Diaphragm, & Epdm Check Valve. C/w Pressure Switch.	95	1.6
SPP70255	02100-840A	Pump and Motor unit, 12 Vdc, 2.1 Gpm, 50 Psi (max). Pbb Double Bypass. - #2 Cam.	50	2.1
SPP70242	02100-734A	Pump and Motor unit, 12 Vdc, 2.1 Gpm, 50 Psi (max). Pvv - #2 Cam.	50	2.1
SPP70241	02100-894A	Pump and Motor unit, 12VDC Motor 2.0 GPM 50 PSI (max). Polypropylene Body Construction W/ Buna Diaphragm & Viton® Check Valve.	60	2
SPP02100535A	02100-535A	Pump and Motor unit, 12VDC Motor 2.0 GPM 50 PSI (max). Polypropylene Body Construction W/ Santoprene Diaphragm & Santoprene Check Valve.	50	2
SPP70247	02100-573A	Pump and Motor unit, 12VDC Motor 2.0 GPM 50 PSI (max). Polypropylene Body Construction W/ Santoprene Diaphragm & Santoprene Check Valve.	50	2

Replacement Parts

Westward Part#	Mfr Part #	Description
PP20381-070	20381-070	3/8" HB Straight x Port
SPP20381-000	20381-000	Port Fitting
SPP21004-302	21004-302	Diaphragm and Bearing Kit
SPP71741	20381002	1/2" Port Kit
SPP71744	20381026	10/13 mm Port Kit
SPP70695	20407030	Check Valve Kit For 4300500
SPP70694	20403040	Diaphragm Kit for Quad Pumps
SPP71747	21010002	Kit
SPP71750	20028008	Kit
SPP20381063	20381063	Kit Port 1/2" OD Vit
SPP20381-009	20381009	Port X 1/2" HB Elbow
SPP70696	20404001	Quad Kit
SPP20028003	20028003	20028003 Kit V/CHMBR STO 2BP

Westward Parts can source many other special order items that are not listed in this catalogue, please visit our website at westwardparts.com or call us directly at 1-888-937-7278. Our team will help you find what you need.
The product images shown are for illustration purposes only and may not be an exact representation of the product.

Electric Diaphram Pumps

PowerFLO™ Pumps

Specifications

- Motor Type: 12 VDC permanent magnet, totally enclosed, non-ventilated
- Leads: 12 AWG, 12" Long
- Temperature Limits: Temperature Limits: Motor is not equipped with thermal protection. For user safety, optimal performance, and maximum motor life, the motor surface temperature should not exceed 180°F (82°C).

Materials of Construction

- Housings: Polypropylene
- Valves: Santoprene
- Diaphragm: Santoprene
- Fasteners: Stainless Steel
- Motor Shell: Coated Steel

Pump

- Type: 5 chamber positive displacement diaphragm pump, self priming, capable of being run dry, demand or bypass mode
- Certifications: CE Approval
- Liquid Temperature: 140°F (60°C) Max.
- Priming Capabilities: 14 feet (4 m)

Max Pressure: 100 PSI (7 bar)
Inlet/Outlet Ports:
7870: 1⁄2" FNPT
7970: 3/4" Delavan Quick Attach
Weight: 8 lbs (3.6 kg)
Max Flow:
7870: 7.0GPM
7970: 7.0GPM
Max Pressure: 60 or 100 PSI

7870-101
Demand/ Threaded

7870-111
Bypass/ Quick attach

7870/7970 FB2		
PSI	GPM	AMPS
10	7.00	11.0
20	6.81	12.0
40	5.96	13.0
60	4.98	17.0
80	3.96	21.0
100	2.55	25.0

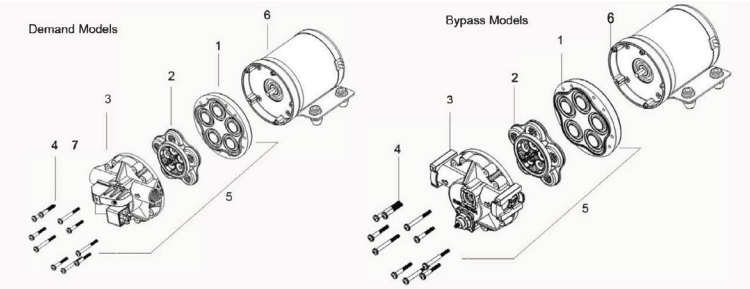

Replacement Parts

Item	Description	Part Number	Qty
1	Lower Housing		1
	7870/7970 Series	LHA-7870	
2	Valve Assembly Housing		1
	7870/7970 Series	VHA-7870	
3	Upper Housing		1
	7800 w/ Pressure Switch	UHA-7800-PS	
	7800 w/ Bypass	UHA-7800-B	
	7900 w/ Pressure Switch	UHA-7900-PS	
	7900 w/ Bypass	UHA-7900-B	
4	Mounting Bolts	J58-053	5
5	Complete Pump Head		1
	7800 w/ Pressure Switch	PHA-7870-PS	
	7800 w/ Bypass	PHA-7870-B	
	7900 w/ Pressure Switch	PHA-7970-PS	
	7900 w/ Bypass	PHA-7970-B	
6	Motor		1
	7870/7970 Series	M12-7870A	
7	Switches		1
	Relay Switch	FBR-102	
	Pressure Switch	7800-PSW-100	

Quick Couplers

Bottom Row: 90000, 90100, 90200, 90300, 90400 Top Row: 90500, 90600, 90700, 90800

Westward Part#	Mfr Part #	Description
Replacement Parts		
SPP70402	90300	15/16" Coupler
SPP70405	90700	15/16" Coupler
SPP70406	90500	15/16" Coupler
SPP70400	90200	5/8" Coupler
SPP7870-101E-SB	7870-101E-SB	FB2 60 PSI Demand Pump
Repair Kits		
SPPRK-M125VC	RK-M125VC	Seal Kit
SPP70600	44-4000RK	4 Roller Repair Kit

Westward Parts can source many other special order items that are not listed in this catalogue, please visit our website at westwardparts.com or call us directly at 1-888-937-7278. Our team will help you find what you need.
The product images shown are for illustration purposes only and may not be an exact representation of the product.

Transfer Pumps

Other Brand Pumps

3" Water Transfer Pumps

This water pump features 82ft of total lift, 26ft suction lift, a centrifugal aluminum pump, heavy duty aluminum impeller, recoil start, and low oil shutdown.

Suction Lift: 26'
Total Lift: 85'
Engine: Powerease
CC: 210
GPM: 264

Westward Part#	Description
SPPWP-3070S	3"-7 HP Water Transfer Pump

Westward Parts can source many other special order items that are not listed in this catalogue, please visit our website at westwardparts.com or call us directly at 1-888-937-7278. Our team will help you find what you need.
The product images shown are for illustration purposes only and may not be an exact representation of the product.

Section 6. Pumps and Accessories

Reference

Mfr Part #	Westward Part #	Description	Page(s)

Pumps - Ace Pumps

Belt Driven Centrifugal Pumps - Ace Pumps

Mfr Part #	Westward Part #	Description	Page
FMC-150	SPP70208	FMC-150 Ace Pump	6-47
FMC-CW-150	SPP70209	1-1/2" x 1-1/4" Frame Mounted Centrifugal Pump	6-52
FMC-CW-150-MAG-D	SPP70235	1-1/2" x 1-1/4" Heavy Duty Magnetic Clutch Driven Centrifugal Pump	6-52
FMC-150-MAG-D	SPP70233	1-1/2" x 1-1/4" High Performance Magnetic Clutch Driven Centrifugal Pump	6-47
FMC-200	SPP70206	2" x 1 1/2" Frame Mounted Centrifugal Pump	6-49

Gas Engine Driven Centrifugal Pumps - Ace Pumps

Mfr Part #	Westward Part #	Description	Page
GE-650-LE	SPPGE-650-LE	1-1/2" x 1-1/4" High Performance Gas Engine Driven Centrifugal Pump 110 GPM - Less Engine	6-41
GE-660-LE	SPPGE-660-LE	1-1/2" x 1-1/4" High Performance Gas Engine Driven Centrifugal Pump - Less Engine	6-42
GE-75-LE	SPPGE-75-LE	Polypropylene Pump Only - Less Engine	6-39
GE-660-HONDA	SPPGE-660-HONDA	GE-660-HONDA "1-1/2"" X 1-1/4"" Centrifugal Pump W/ 5.5HP Honda	6-42
GE-800-HONDA	SPPGE-800-HONDA	Pump 2" x 1.5" Honda	6-43
GE-600-LE	SPPGE-600-LE	Pump Only - Less Engine	6-41, 6-42

Hydraulic Driven Centrifugal Pumps - Ace Pumps

Mfr Part #	Westward Part #	Description	Page
FMC-200-HYD-310	SPP70204	2" x 1-1/2" High Capacity Hydraulic Driven Pump	6-16
FMC-200-HYD-307	SPP70341	2" x 1-1/2" High Capacity Hydraulic Driven Hypro Centrifugal Pump	6-16
FMC-150F-HYD-206	SPPFMC-150F-HYD-206	1-1/2" x 1-1/4" Hydraulic Driven Pump	6-11
FMC-HYD-210	SPP70201	FMC-HYD-210 Ace Pump	6-7
FMC-HYD-LM	SPP70216	FMC-HYD-LM Pump Only	6-5, 6-7
FMCSC-650-HYD-SS	SPPFMCSC-650-HYD-SS	FMCSC-650-HYD-SS "Pump Hyd Drive E 1.5"" X 1.25"" X 6.56"" SC Seal"	6-28
FMC-200F-HYD-304	SPP70174	300 Flange x 200 Flange Hydraulic Driven Pump	6-21
FMC-200F-HYD-304-12SAE	SPPFMC-200F-HYD-304-12SAE	300 Flange x 200 Flange Hydraulic Driven Pump 12SAE	6-21
FMCSC-150F-HYD-206	SPPFMCSC-150F-HYD-206	1-1/2" x 1-1/4" High Performance Frame Mounted Centrifugal Pump	6-11
FMC-150-HYD-206	SPP70207	1-1/2" Suction x 1-1/4" Discharge Hydraulic Ace Pump	6-9
FMCWS-650F-HYD	SPPFMCWS-650F-HYD	1-1/2" x 1-1/4" Ace Pump c/w Wet Seal	6-12
FMC-150-HYD-LM	SPP70231	1-1/2" x 1-1/4" Hydraulic Pump Only	6-9
FMC-HYD-204	SPP70200	1-1/4" x 1" Hydraulic Motor Driven Centrifugal Pump	6-7
FMC-200-HYD-210	SPP70203	2" x 1-1/2" High Capacity Hydraulic Driven Pump	6-16
FMC-200-HYD-304	SPP70212	2" x 1-1/2" High Capacity Hydraulic Driven Pump	6-16
FMC-200-HYD-300-LM	SPP70219	2" X 1-1/2" Pump Only	6-16
FMCSC-200-HYD-304-12SAE	SPP70239	Ace Cast Iron Hydraulic Driven Centrifugal Pump	6-16
FMC-650-HYD	SPPFMC-650-HYD	FMC-650-HYD Ace Pump	6-28
FMC-75-HYD-206	SPPFMC-75-HYD-206	FMC-75-HYD-206 Hydraulic Pump	6-3
FMC-HYD-204-CI	SPPFMC-HYD-204-CI	FMC-HYD-204-CI Hydraulic Driven Centrifugal Pump	6-7
FMC-HYD-310	SPP70202	FMC-HYD-310 Ace Pump	6-7
FMCSC-75-HYD-206	SPPFMCSC-75-HYD-206	FMCSC-75-HYD-206 Hyd Drive Pump	6-3
FMCSC-HYD-204-CI	SPPFMCSC-HYD-204-CI	FMCSC-HYD-204-CI Ace Hyd Driven Pump Silicone Carbide Seal	6-7

Gas Engine Driven Centrifugal Pumps - Ace Pumps

Mfr Part #	Westward Part #	Description	Page
FMC-150-MIA	SPP70131	1-1/2" x 1-1/4" Cast Iron Centrifugal Pump Only	6-37
PTOC-150-1000-B	SPP70107	PTOC-150-100O-B Pump	6-35
FMC-MIA	SPP70130	FMC-MIA Pump	6-34
PTOC-150-1000-21SP	SPP70105	PTOC-150-1000 Ace Pump	6-35
PTOC-150-600-B	SPP70106	PTOC-150-600-B Pump	6-35

Replacement Parts and Repair Kits - Ace Pumps

Mfr Part #	Westward Part #	Description	Page
55032	SPP55032	55032 Wet Seal Barrier Fluid (Quart)	6-70
812-21SP-1516	SPP70435	812-21SP-1516 Coupler	6-35
RK-GE-100-A	SPP70671	RK-GE-100-A Ace Repair Kit	6-40
RK-FMC	SPP70674	Seal & O-Ring Repair Kit	6-46
RK-BAC-75-HYD	SPP70675	Repair kit for 200 Series motor with high pressure lip seal	6-6
RK-BAC-75-HYD-310	SPP70676	Old style Seal Kit With Quad Seal #41379	6-8, 6-20,
RK-FMC-150	SPP70679	Repair Kit for 150 Series Pump	6-12
RK-BAC-75-HYD-300	SPP70728	RK-BAC-75-HYD-300 Repair Kit	6-6-8, 6-18, 6-19, 6-20, 6-22
RK-BAC-75-HYD-300-L	SPP70729	Hydraulic Repair Kit for Hydraulic Motors Only	6-6-8, 6-18, 6-19, 6-20, 6-22

Section 6. Pumps and Accessories

Reference

Mfr Part #	Westward Part #	Description	Page(s)
S200	SPP70984	S200 Spacer	6-4, 6-6, 6-8, 6-10
BAC-26-200-P	SPP70988	Thermoplastic Impeller	6-17, 6-18, 6-19, 6-20, 6-22
BAC-26-CI	SPP71582	Impeller	6-64, 6-46
BAC-26-VALOX	SPP71583	BAC-26-VALOX Impeller	6-34, 6-46
BAC-7V	SPP71585	Viton® Seal	6-6, 6-8, 6-10, 6-12, 6-15
BAC-4	SPP71586	BAC-4 Gasket	6-6, 6-17, 6-46, 6-50, 6-52
BAC-54	SPP71589	Slinger	6-4, 6-6, 6-8, 6-10, 6-12
BAC-33	SPP71591	Snap Ring	6-4, 6-6, 6-8, 6-10, 6-12
BAC-32	SPP71593	Snap Ring	6-4, 6-6, 6-8, 6-10, 6-12
BAC-13	SPP71595	Arm	6-34, 6-37
BAC-36	SPP71596	BAC-36 Snap Ring	6-34, 6-37, 6-48, 6-53
BAC-28-10	SPP71597	10 Groove Belt	6-34
BAC-6-SS	SPP71600	BAC-6 Shaft	6-34, 6-46,
BAC-57	SPP71603	BAC-57 Set Screw	6-34, 6-37
BAC-55	SPP71604	Bearing	6-34, 6-37
BAC-10-S	SPP71610	BAC-10-S Shaft	6-34, 6-37
BAC-51	SPP71613	BAC-51 Key	6-34, 6-37
BAC-34	SPP71614	BAC-34 Snap Ring	6-34, 6-37
BAC-31-1	SPP71615	Bearing	6-34, 6-37
BAC-35	SPP71617	BAC-35 Snap Ring	6-34, 6-37
BAC-46	SPP71621	BAC-46 Spacer	6-34, 6-37
40160	SPP71622	40160 O-Ring For Ace Pump	6-6 , 6-8, 6-10, 6-12, 6-13
BAC-32-S	SPP71625	Spacer	6-4, 6-6, 6-8, 6-10, 6-12
BAC-6-HYD-SS	SPP71627	Shaft 4 1/4" Long	6-6, 6-8, 6-10, 6-15, 6-17
BAC-23-A-SS	SPP71630	Nut	6-8, 6-48, 6-51
BAC-24-HYD-SS	SPP71631	Washer	6-6, 6-8, 6-10, 6-12, 6-15
BACH-25	SPP71632	Key	6-6, 6-8, 6-10, 6-12, 6-15

Mfr Part #	Westward Part #	Description	Page(s)
BAC-26-HYD-VALOX	SPP71633	Impeller	6-6, 6-8
40442	SPP71634	40442 BAC-26-HYD-CI Impeller	6-6, 6-8
BAC-75-HYD-204	SPP71641	BAC-75-HYD-204 Motor	6-4, 6-8
BAC-75-HYD-210	SPP71642	BAC-75-HYD-210 Motor	6-8, 6-17
BAC-76-HYD	SPP71644	Coupling	6-8, 6-17
BAC-4-150	SPP71652	O-Ring	6-10, 6-12, 6-15, , 6-24, 6-25
BAC-6-150/200-SS	SPP71653	BAC-6-150/200-SS Shaft	6-37, 6-47, 6-50
BAC-12-150	SPP71657	BAC-12-150 Volute	6-6-10, 6-15, 6-37, 6-47, 6-48
BAC-26-150-CI	SPP71658	Cast Impeller	6-10, 6-12, 6-15, 6-24, 6-25
BAC-28-10-150	SPP71659	Poly-Belt	6-37
BAC-28-10M-150	SPP71672	Poly Belt	6-37
BAC-26-HYD-200-CI	SPP71675	BAC-26-HYD-200-CI Impeller	6-17, 6-50
BAC-14-150-HYD	SPP71678	BAC-14-150-HYD Mount	6-10, 6-12, 6-15
41372	SPP71681	Motor	6-10, 6-12, 6-15
BAC-6-CW-SS	SPP71687	BAC-6-CW-SS RHT Shaft	6-52
BAC-26-CW-150-P	SPP71780	BAC-26-CW-150-P Valox Impeller	6-52, 6-53
BAC-26-CW-150-CI	SPP71781	BAC-26-CW-150-CI CI Impeller	6-52, 6-53
BAC-26-150-P	SPP71916	Impeller	6-10, 6-12, 6-15, 6-24, 6-25
BAC-23-A	SPP71918	Nut	6-6, 6-8, 6-10, 6-12, 6-15
BAC-26-200-CI	SPP71919	BAC-26-200-CI 40433 Impeller	6-17, 6-18, 6-20, 6-22, 6-27
BAC-4A	SPP71920	O-Ring	6-6, 6-8, 6-17, 6-18, 6-19
BAC-7SC	SPP71921	Seal Kit	6-6, 6-8, 6-12, 6-15, 6-17
BAC-25	SPP71922	Key	6-17, 6-18, 6-19, 6-20, 6-22
BAC-6-HYD-200-SS	SPP71923	BAC-6-HYD-200-SS Shaft (4-3/4" Long)	6-17, 6-18, 6-19, 6-20, 6-22
BAC-75-HYD-304	SPP71924	Motor	6-19
52706	SPP74974	Kit	6-8, 6-18, 6-19, 6-20, 6-22

Section 6. Pumps and Accessories

Reference

Mfr Part #	Westward Part #	Description	Page(s)
RK-FMCSC-150	SPP74975	Repair Kit Silicone Carbide Seal	6-12, 6-15, 6-37, 6-47, 6-48
7AC-14-FLG	SPP7AC-14-FLG	7AC-14-FLG 41530 Volute FMC-200F-HYD-304	6-22, 6-27
BAC-37	SPPBAC-37	Sealed Ball Bearing forAce Pump	6-22, 6-34, 6-37, 6-46, 6-47
BAC-75-HYD-310N	SPPBAC-75-HYD-310N	BAC-75-HYD-310N Hydraulic Motor	6-20
30225	SPPBAC-7-660V	Mechanical Seal	6-39, 6-42
RK-BAC-75-HYD-L	SPPRK-BAC-75-HYD-L	RK-BAC-75-HYD-L Repair Kit 200 Series Motor (LIP)	6-4, 6-8, 6-12, 6-15, 6-17
RK-FMCSC-205	SPPRK-FMCSC-205	Repair Kit Assembly	6-27
RK-FMCSC-650	SPPRK-FMCSC-650	RK-FMCSC-650 Repair Kit	6-29, 6-31
RK-GE-660 (61162)	SPPRK-GE-660	RK-GE-660 61162 GE660 Repair Kit Seal & O-Rings	6-42
ACAL-14	SPP71689	ACAL-14 Volute	6-43, 6-44
RK-GE-800/1600	SPPRK-GE-800/1600	Repair Kit Assembly	6-43
41362	SPP41362	Repair Kit 300HYD Motor	6-17, 6-18, 6-19, 6-20, 6-22

Mfr Part #	Westward Part #	Description	Page(s)
Pumps - Hypro			
Centrifugal Pumps - Hypro			
Mfr Part #	**Westward Part #**	**Description**	**Page**
9263C-C	SPP70229	9263C-C Pump	6-59
9303C-HM1C	SPP70220	114gpm, 130psi. Max Hydraulic 13gpm. For Open/Closed Systems. Hypro Centrifugal Pump	6-60
9303C-HM4C	SPP70223	115 gpm, 93 psi. Max Hydraulic 7 gpm. For Open/Closed Systems Hypro Centrifugal Pump	6-60
9303S-HM4C	SPP70226	115 gpm, 93 psi. Max Hydraulic 7 gpm. For Open/Closed Systems Hypro Centrifugal Pump Stainless Steel	6-60
9303C-HM3C	SPP70222	125 gpm, 98 psi. Max Hydraulic 24 gpm. For Large Open Systems. Hypro Centrifugal Pump	6-60
9306C-HM1C	SPP70330	207 gpm, 130 psi. Max Hydraulic 13 gpm. For Open/Closed Systems. Hypro Centrifugal Pump	6-60
9306C-HM5C	SPP70332	212 gpm, 140 psi. Max Hydraulic 17 gpm. For Open/Closed Systems.	6-60
9303C-HM5C	SPP9303C-HM5C	9303C-HM5C Hypro Pump	6-60
9303P-HM1C	SPP70080	9303P-HM1C Pump	6-64
9303P-HM4C	SPP70082	9303P-HM4C Poly Pump	6-64
9303P-HM5C	SPP9303P-HM5C	9303P-HM5C Pump	6-64
9303S-HM5C	SPP9303S-HM5C	9303S-HM5C SS Pump	6-60
9306C-HM1C-U	SPP9306C-HM1C-U	9306C Pump HM1C: 9-14 gpm/34-53 lpm Hydraulic Pump W/UNI Valve	6-65
9402C-540Q	SPP70274	9402C-540Q Pump	6-69
9303C-HM2C	SPP70221	97 gpm, 95 psi. Max Hydraulic 6 gpm. For Closed Systems. 1-1/2" NPT inlet, 1-1/4" NPT outlet.	6-60
9402C-1000L	SPP70279	Shurflo Diaphragm Pump	6-69
9306S-HM5C-3U	SPP9306S-HM5C-3U	Stainless Steel Flanged Hydraulic Pump	6-66
Diaphragm Pumps - Hypro			
Mfr Part #	**Westward Part #**	**Description**	**Page**
8030-863-239	SPP70296	Shurflo Diaphragm Pump 1.5 GPM	6-97
8000-533-236	SPP70294	Standard Demand Pump: Viton® valves, Santoprene® diaphragm, 60 PSI (4.1 bar) demand switch	6-97
8020-513-236	SPP70304	Standard Demand Pump: Viton® valves, Santoprene® diaphragm, 60 PSI (4.1 bar) demand switch with 6 ft (1.8 m) power cord	6-97
9910-D30GRGI	SPP70099	Medium Pressure, 2 Diaphragm Pump 5/8" Hollow Shaft Assembled with gearbox 9910-KIT1640 and control 9910-GS40GI for mounting on 5 hp gas engine	6-88
9910-GS40GI	SPP70071	9910-GS40G1 Control Unit	6-92

Section 6. Pumps and Accessories

Reference

Mfr Part #	Westward Part #	Description	Page(s)
9910-KIT1722	SPP9910-KIT1722	9910-Kit1722 D250 Diaphragm Kit	6-90
9910-KIT1904	SPP9910-KIT1904	D250 O-Ring Kit	6-90
9910-KIT2479	SPP9910-KIT2479	9910-Kit2479 Kit - Desmo Diaphragm	6-90
9910-D30	SPP70068	9910-D30 Hypro Pump	6-88
9910-D1064	SPP70090	High Pressure, 4 Diaphragm	6-89
9910-D250	SPP70093	Low Pressure, 6 Diaphragm	6-88

Piston & Plunger Pumps - Hypro

Mfr Part #	Westward Part #	Description	Page
3375-0015-2	SPP3375-0015-2	Pulsation Dampener	6-110
5320C-RX	SPP70056	5320C-RX Hypro Pump Solid Shaft	6-105
5210C	SPP70064	5210C Hypro Pump	6-104
5321C-H	SPP70037	5321C-H Hypro Pump	6-106
5322C-H	SPP70038	5322C-H Pump	6-106

Replacment Parts and Repair Kits- Hypro

Mfr Part #	Westward Part #	Description	Page
4101C-T2	SPP4101C-T2	4101C-T2 Roller Pump W/ Teflon Rollers	6-79
3430-0333	SPP70665	3430-0333 Repair Kit	6-58, 6-69
3430-0635	SPP3430-0635	3430-0635 Seal	6-75, 6-76
1320-0076	SPP70415	3/8" Forged Steel PTO Adapter For 1500/1700/7560/7700	6-85, 6-86
1323-0072	SPP70458	15/16" Hypro Steel Pump Quick Coupler (6 Spline)	6-85, 6-86
1323-0073	SPP70459	3/8" Forged Steel Quick Coupler For 1500/1700/7560	6-85, 6-86
1323-0074	SPP70462	5/8" Forged Steel Pump Quick Coupler	6-85, 6-86
1323-0075	SPP70463	1323-0075 Coupler	6-85, 6-86
1323-0076	SPP70464	1323-0076 Coupler	6-85, 6-86
3430-0390	SPP70620	Roller and Rotor Repair Kit	6-85
3430-0386	SPP70626	3430-0386 Repair Kit	6-85
3430-0384	SPP70629	Repair Kit for 6500C, 6500N, 6500XL Pumps	6-85
3430-0381	SPP70630	Repair Kit for 7560C, 7560N, 7560XL Pumps	6-85
3430-0037	SPP70637	3430-0037 Repair Kit	6-104
3430-0332	SPP70641	Repair Kit for 9202C, 9203C, 9206C, 9262C-C, 9263C-C, 9302C, 9303C, 9306C, 9402C, 9403C Pumps	6-59, 6-60, 6-65, 6-66, 6-67
9910-KIT1724	SPP70644	D30 Diaphragm Kit	6-90
9910-GS50GI	SPP70708	9910-GS50GI Control Assembly	6-92
9910-KIT2203	SPP70723	9910-Kit2203 Shaft Kit	6-90
3430-0445	SPP70727	Seal & O-Ring Repair Kit for 930 series	6-64
9910-KIT2408	SPP71820	Valve Kit	6-90
9910-KIT2409	SPP71821	O-Ring Kit	6-90
9910-KIT1723	SPP71844	Diaphragm Kit	6-90
9910-KIT1963	SPP71852	9910-Kit1963 Valve Kit	6-90
3430-0589	SPP77715	Silicone Seal Kit N	6-59, 6-60, 6-62, 6-65, 6-66
94-718-00	SPP94-718-00	94-718-00 Motor Kit	6-102
3430-0692	SPP3430-0692	3" Pump Head Kit with EPDM Seal	6-75, 6-76
3430-0757	SPP3430-0757	3430-0757 Kit Seal Poly XFER	6-75, 6-76
3430-0690	SPP3430-0690	Pump Head Kit for 1542P-55SP with EPDM seal	6-75, 6-76

Roller Pumps - Hypro

Mfr Part #	Westward Part #	Description	Page
4001C-R	SPP70088	4001C-R Hypro Pump	6-79
1502C	SPP70046	1502C Hypro Pump	6-84
4001XL	SPP70073	4001XL Silver Cast Pump	6-79
4101N-H	SPP70089	4101N-H Hypro Pump	6-79
4101N-EH	SPP70039	12 Volt Ni-Resist 4 Roller Pump 1900 RPM	6-80
1502N	SPP70047	1502N Hypro Pump	6-84
1700N	SPP70045	1700N Hypro Pump	6-83
1700XL	SPP70075	1700XL Silver Cast Pump	6-83
4001C	SPP70040	4 Roller Cast iron pump 5/8" solid shaft	6-46
4001N	SPP70041	4 Roller Ni-resist pump 5/8" solid shaft	6-79
6500C-R	SPP70050	6500C-R Hypro Pump	6-81
7700N	SPP70052	7700N Hypro Pump	6-83
7700XL	SPP70078	7700XL Silver Cast Pump	6-83
7700C	SPP70051	Cast Iron 7 Roller Pump	6-83
7560C	SPP70053	Cast Iron 8 Roller Pump	6-81
6500C	SPP70048	Cast Iron Pump	6-81
4101C	SPP70042	Cast iron pump 5/8" solid shaft	6-79
7560C-R	SPP70055	Cast Iron Pump with base kit, reverse rotation	6-81
1700C	SPP70044	Hypro 5 Roller Pump	6-83
4101N	SPP70043	Ni-Resist Pump 5/8" Solid Shaft	6-79
4101XL	SPP70074	Silver Cast 5/8" solid shaft	6-79
7560XL	SPP70079	Silver Cast 8 Roller Pump	6-81
6500XL	SPP70077	Silver Cast Pump	6-81

Shurflo Pumps - Hypro

Mfr Part #	Westward Part #	Description	Page
5059-3610-D011	SPP5059-3610-D011	12V, 5 GPM, Bypass, 1/2"	6-94
9910-VDR50	SPP70710	Control unit, for mounting on pump model 9910-D503, 9910-D813, 9910-D1064 and 9910-D1265, is capable of handling flow rates up to 35 gpm (132.5 lpm) and pressures up to 725 psi (50 bar).	6-89

Section 6. Pumps and Accessories

Reference

Mfr Part #	Westward Part #	Description	Page(s)
2088-443-144	SPP2088-443-144	Automatic Demand 12VDC Pump 3.5 gpm, 45PSI, 1/2" MSPT Ports, 9.1 Max Draw	6-99
4111-035	SPP70315	12 VDC with heat sink, Viton® valves, Santoprene diaphragm, splash-proof switch, 45 psi with manifold	6-100
4211-035	SPP70316	12 VDC with heat sink, Viton® valves, Santoprene diaphragm, splash-proof switch, 45 psi, no manifold	6-100
5059-1310-D011	SPP5059-1310-D011	12 Volt Automatic Demand Pump-5 GPM	6-94
2088-343-500	SPP2088-343-500	2088-343-500 Pump 12VDC-Viton®/ SANTO N/C	6-99
8000-543-136	SPP70265	8000-543-136 Pump	6-95
8000-543-220	SPP8000-543-220	8000-543-220 Pump 12V 3.0 N/C P/V/S	6-96
8000-543-290	SPP8000-543-290	8000-543-220 Pump 12V 6.0 L/M	6-96
8006-543-250	SPP70269	8006-543-250 Pump	6-96
8020-503-250	SPP70305	8020-503-250 Bypass Pump	6-97
8000-343-236	SPP70290	All Viton® Pump: Viton® valves, Viton® diaphragm, 60 PSI (4.1 bar) demand switch	6-95
8007-543-850	SPP70284	Bypass Pump w/Electrical Package: Viton® valves, Santoprene® diaphragm, 45 PSI (3.1 bar) bypass, Manual on/off switch 2 pin connector and fuse	6-98
8007-543-836	SPP70288	Demand Pump w/Electrical Package: Viton® valves, Santoprene® diaphragm, 60 PSI (4.1 bar) Demand Switch Manual on/off switch 2 pin connector (8007-543-836 includes fuse)	6-98
8020-833-238	SPP70293	High Pressure Pump with 6 ft. Power Cord: Viton® valves, Santoprene® diaphragm, 100 PSI (6.9 bar) demand switch	6-97
8000-543-238	SPP70289	High Pressure Pump: Viton® valves, Santoprene® diaphragm, 100 PSI (6.9 bar) demand switch	6-95
8000-541-236	SPP70287	Lawn and Garden Pump: Viton® valves, Santoprene® diaphragm, 60 PSI (4.1 bar) demand switch	6-95
2088-313-145	SPP70292	Premium Pump with Fin Cooled Motor 3.6 gpm [13.6 lpm] open flow, Viton® valves, Santoprene diaphragm 45 psi [3.1 bar] Demand Switch, 1/2" MSP ports, Continuous duty	6-99
8030-813-239	SPP70291	Shurflo Diaphragm Pump 1.6 GPM	6-95
8000-543-250	SPP70281	Standard Bypass Pump: Viton® valves, Santoprene® diaphragm, 45 PSI (3.1 BAR) internal bypass	6-96
2088-343-135	SPP70282	Standard Pump 3.0 gpm [11.3 lpm] open flow, Viton® valves, Santoprene diaphragm, 45 psi [3.1 bar] Demand Switch, 1/2" MSP ports.	6-99
2088-394-154	SPP70295	Standard Pump 3.2 gpm [12.1 lpm] open flow, Viton® valves, Santoprene diaphragm 40 psi [2.8 bar] demand switch, 1/2" MSP ports	6-99
2088-394-144	SPP70310	Standard Pump with Power Cord 3.0 gpm [11.4 lpm] open flow, Viton® valves, Santoprene diaphragm, 45 psi [3.1 bar] Demand Switch, 1/2" MSP ports	6-99
8000-643-236	SPP70267	Transfer Pump: Buna valves, Geolast® diaphragm, 60 PSI (4.1 bar) demand switch	6-95

Transfer Pumps - Hypro

Mfr Part #	Westward Part #	Description	Page
1543P-130SP	SPP1543P-130SP	1543P-130SP 3" 13HP Poly Transfer Pump	6-75
1543P-390EHSP	SPP1543P-390EHSP	1543P-390EHSP "3" GX390 Poly Transfer Pump	6-75
1543P-130ESP	SPP1543P-130ESP	3" 13 HP Poly Transfer Pump	6-75

Section 6. Pumps and Accessories

Reference

Mfr Part #	Westward Part #	Description	Page(s)
Pumps - Banjo			
Centrifugal Pumps - Banjo			
Mfr Part #	**Westward Part #**	**Description**	**Page**
205PB	SPW205PB	2" Poly Bearing Pedestal w/ ¾" Shaft & 5 Vane Impeller	6-111
200PH-5	SPP200PH-5	2" Poly Pump w/5.5 HP Honda® Engine	6-112
M332PIE101W	SPPM332PIE101W	3" Manifold Cast Iron Wet Seal Pump w/10HP Single Phase Electric Motor	6-115
Replacement Parts and Repair Kits - Banjo			
Mfr Part #	**Westward Part #**	**Description**	**Page**
12777	SPP71519	½" Plug	6-112, 6-115, 6-116
13777	SPP71553	¾" Plug	6-116
13778	SPP71555	O-Ring	6-116
12000A	SPP70663	5 Vane Impeller Repair Kit	6-112
12999A	SPP70684	2" Poly Pump Seal Kit	6-112
12754	SPP71507	O-Ring Segment	6-112
12719A	SPP71508	Body O-Ring	6-112, 6-116
12901	SPP71525	SS Rear Bracket Washer	6-112, 6-116
12702A	SPP71527	Poly Pump Volute	6-112
12772	SPP71539	5 Vane Impeller	6-112
12715A	SPP71543	SS Bracket Screws	6-112, 6-116
12771A	SPP71544	3 Vane Impeller	6-116
12712A	SPP71551	Body Assembly	6-112
12713	SPP12713V	Seal Assembly	6-112
12717	SPP71505	O-Ring for Screw Head	6-112, 6-116
12765	SPP71510	Stud	6-112
12725	SPP71514	SS Volute Screws	6-112
12705	SPP71515	Poly Pump Check Valve	6-112, 6-116
12710	SPP71528	O-Ring for Seal Assembly	6-112
12710V	SPP71537	FKM O-Ring for Seal Assembly	6-112
12882A	SPP71538	Bearing Pedestal	6-112
12703A	SPP71542	Rear Bracket	6-112
12775A	SPP71548	Impeller Hex Nut	6-112
12716	SPP75254	Poly Pump Slinger	6-112
17018	SPP17018	Gasket Adapter	6-114
12000AV	SPP70687	5 Vane FKM Impeller Repair Kit	6-112
12003A	SPP12003A	3 Vane Poly Pump Repair Kit EPDM	6-112
12713	SPP71504	Seal Assembly	6-112

Mfr Part #	Westward Part #	Description	Page(s)
Pumps - FloJet			
Diaphragm Pumps - FloJet			
Mfr Part #	**Westward Part #**	**Description**	**Page**
04300515A	SPP4300-515A	115V, 4.8 GPM, 1/2" Port Pump	6-120
02130-032A	SPP2130-032A	Pump and Motor unit, 115 Volt, 1.8 Gpm, 95 Psi. Nylon Body Construction, W/ Epdm Diaphragm, & Epdm Check Valve. C/w Pressure Switch.	6-121
D3835V5011A	SPP70179	Pump and Motor unit, 115 Volt, 2.0 Gpm, 60 Psi (max). Polypropylene Body Construction, W/ Santoprene Diaphragm, & Viton® Check Valve. C/w Pressure Switch.	6-119
04300042A	SPP4300-042A	Pump and Motor unit, 115 Volt, 3.5 Gpm, 45 Psi (max). Pse C/w Pressure Switch.	6-120
04300043A	SPP04300043A	Pump and Motor unit, 115 Volt, 4.7 Gpm, 40 Psi (max). Pse C/w Pressure Switch.	6-120
D21X003A	SPP70244	Pump and Motor unit, 12 Vdc, 1.8 Gpm, 70 Psi (max). Polypropylene Body Construction, W/ Santoprene Diaphragm, & Viton® Check Valve. Single Bypass	6-119
D3134H1311A	SPP70257	Pump and Motor unit, 12 Vdc, 2.0 Gpm, 50 Psi (max). Pss - #2 Cam.	
02100-840A	SPP70255	Pump and Motor unit, 12 Vdc, 2.1 Gpm, 50 Psi (max). Pbb Double Bypass. - #2 Cam.	6-121
02100-734A	SPP70242	Pump and Motor unit, 12 Vdc, 2.1 Gpm, 50 Psi (max). Pvv - #2 Cam.	6-121
04300142A	SPP70243	Pump and Motor unit, 12 Vdc, 3.2 Gpm, 45 Psi (max). Pse C/w Pressure Switch.	6-120
4300500A	SPP70250	Pump and Motor unit, 12 Vdc, 3.5 Gpm, 45 Psi (max). Polypropylene Body Construction, W/ Santoprene Diaphragm, & Viton® Check Valve. C/w Pressure Switch.	6-120
04100505A	SPP70248	Pump and Motor unit, 12 Vdc, 3.5 Gpm, 45 Psi (max). Pse Nsw	6-120
4300-143A	SPP70251	Pump and Motor unit, 12 Vdc, 4.7 Gpm, 45 Psi (max). Pse C/w Pressure Switch.	
D3131H5011A	SPPD3131H5011A	Pump and Motor Unit, 12 volt DC, cw 60 PSI Pressure Switch. - #2 Cam.	6-119
02100-894A	SPP70241	Pump and Motor unit, 12VDC Motor 2.0 GPM 50 PSI (max). Polypropylene Body Construction W/ Buna Diaphragm & Viton® Check Valve.	6-121

Section 6. Pumps and Accessories

Reference

Mfr Part #	Westward Part #	Description	Page(s)
02100-535A	SPP02100535A	Pump and Motor unit, 12VDC Motor 2.0 GPM 50 PSI (max). Polypropylene Body Construction W/ Santoprene Diaphragm & Santoprene Check Valve.	6-121
02100-573A	SPP70247	Pump and Motor unit, 12VDC Motor 2.0 GPM 50 PSI (max). Polypropylene Body Construction W/ Santoprene Diaphragm & Santoprene Check Valve.	6-121
04300504A	SPP70198	Pump and Motor unit, 12VDC, 5 GPM, 35 PSI (max). Polypropylene Body Construction, W/ Santoprene Diaphragm, & Viton® Check Valve. Ports are 3/4 Hose Barb .	6-120
04100502A	SPP70197	Pump and Motor unit, 12VDC, 5 GPM, 40 PSI (max). Polypropylene Body Construction, W/ Santoprene Diaphragm, & Viton® Check Valve. Ports are 3/4 Hose Barb .	6-120

Replacement Parts and Repair Kits - FloJet

Mfr Part #	Westward Part #	Description	Page
20381-070	PP20381-070	3/8" HB Straight x Port	6-121
20381-000	SPP20381-000	Port Fitting	6-121
21004-302	SPP21004-302	Diaphragm and Bearing Kit	6-121
20381002	SPP71741	1/2" Port Kit	6-121
20381026	SPP71744	10/13 mm Port Kit	6-121
20407030	SPP70695	Check Valve Kit For 4300500	6-121
20403040	SPP70694	Diaphragm Kit for Quad Pumps	6-121
21010002	SPP71747	Kit	6-121
20028008	SPP71750	Kit	6-121
20381063	SPP20381063	Kit Port 1/2" OD Vit	6-121
20381009	SPP20381-009	Port X 1/2" HB Elbow	6-121
20404001	SPP70696	Quad Kit	6-121

Mfr Part #	Westward Part #	Description	Page(s)

Pumps - Delavan

Electric Diaphragm Pumps - Delavan

Mfr Part #	Westward Part #	Description	Page
7870-101E-SB	SPP7870-101E-SB	FB2 60 PSI Demand Pump	6-122

Replacement Parts and Repair Kits - Delavan

Mfr Part #	Westward Part #	Description	Page
90300	SPP70402	15/16" Coupler	6-122
90700	SPP70405	15/16" Coupler	6-122
90500	SPP70406	15/16" Coupler	6-122
RK-M125VC	SPPRK-M125VC	Seal Kit	6-122
44-4000RK	SPP70600	4 Roller Repair Kit	6-122
90200	SPP70400	5/8" Coupler	6-122

Pumps - Other Brand

Transfer Pumps - BE Pressure

Mfr Part #	Westward Part #	Description	Page
WP-3070S	SPPWP-3070S	3"-7 HP Water Transfer Pump	6-123

Some of the items in this Catalogue are not listed with a Westward Parts Number. If you would like to receive a quote or request that we add an item to our catalogue, please contact us at 1-888-937-7278

Westward Parts can source many other special order items that are not listed in this catalogue, please visit our website at **westwardparts.com** or call us directly at **1-888-937-7278.** Our team will help you find what you need.

Parts offered by Westward Parts Services Ltd. are provided by different manufacturers. The use of OEM part numbers are for identification purposes only - No implication is made that the parts are, in fact, the OEM part (unless specified otherwise). The product images shown are for illustration purposes only and may not be an exact representation of the product.

This catalogue is intended for quick reference use. While a great deal of effort has been made to ensure application information, descriptions, and specifications are accurate, Westward Parts Services Ltd. cannot guarantee accuracy as a result of ever-changing model information, product updates, and superseded parts. Westward Parts Services Ltd. will not be liable to any third party should any of the information contained within this catalogue be in error.

Westward has the part!

Westward Parts offers the most comprehensive range of products to meet the needs of all agricultural and industrial customers.

Agriculture Parts

- Bearings, Seals, Flanges, O-Rings
- 3 Point Hitch Parts or Tillage Tools
- PTO Drives, Adapters, Yokes, Crosses
- Canvas, Swather Parts, Canvas Repair
- Combine Repair Parts
- Harrow Parts, Pickup & Harrow Tines
- Pickup Reel Parts
- Cutting Parts & Guards, Ag Accessories

Sprayer Parts

- Pumps & Couplers
- Valves, Manual & Electric
- Tips, Strainers, Filters
- Nozzle Bodies, Caps, Boom Clamps
- Hose, Fittings, Cam Locks
- Handguns
- Pressure Washer Parts
- Booms, Tanks, Accessories

Estate Equipment

- Cameras & Accessories
- Fencing Equipment
- Hay & Bale Handling Equipment
- Lawn & Garden
- Material Movement
- Estate Sprayers & Accessories
- Tillage Equipment
- Water, Transfer & Trash Pumps

Industrial Parts

- Bearings, Seals, Flanges, O-Rings
- Sheaves, Pulleys, Sprockets, Weld-ons
- Hardware, Drawpins, Wire Rope, Lubricants
- Chain, V-Belts, Chain Tools
- PTO Drives, Adapters, Yokes, Crosses
- Hubs, Wheels, Spindles, Casters
- Belting Seals and Shields
- Hydraulic Fittings, Couplers, Cylinders

CANADA'S EXCLUSIVE DISTRIBUTOR FOR

MacDon *Performance Parts*

1-888-937-7278

WESTWARD PARTS

For 45 years, Westward Parts continues to be the premier provider of Quality Agricultural Parts and Equipment in Western Canada.

www.westwardparts.com

Westward has the part!